www.ovicx.com

OVICX

Treadmill Operation Manual

A2 Series

OVICX

CONTENTS

1.Product Introduction - - - - - - - - - - - - - - - - 01

2.Products and Accessories - - - - - - - - - - - - - - 02

3.Schematic Diagram of Structure and Function - - - - - - 03

4.Installation Instructions - - - - - - - - - - - - - - - 04

5.Instructions for Use of LED Style - - - - - - - - - - - 08

6.Fault Code Display - - - - - - - - - - - - - - - - - - 11

7.Safety Precautions - - - - - - - - - - - - - - - - - - 12

8. Maintenance Guidelines and Instructions - - - - - - - - 17

9.Exercise Advice and Policy - - - - - - - - - - - - - - 20

1.Product Introduction

Product name: OVICX Treadmill

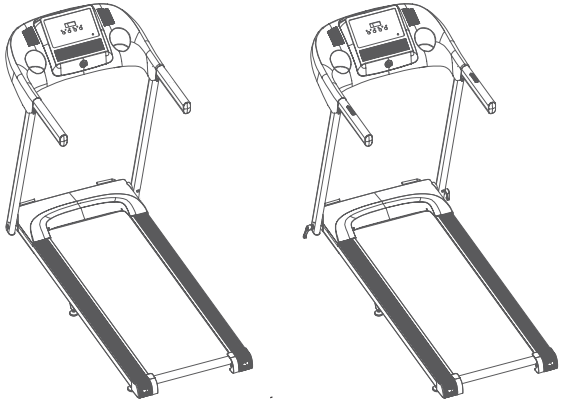

Product model	A2	A2S
Expanded size (L*W*H)	45.28"L*26.97"W*46.46"H	45.28"L*26.97"W*46.46"H
Speed range	0.62-7.5mph	0.62-7.5mph
Rated voltage	110V	110V
Rated frequency	50/60Hz	50/60Hz
Rated power	560W	560W
Peak Power	1.85HP	1.85HP
Effective running area	16.54"L*47.24"W	16.54"L*47.24"W
Display	LED	LED
Product gross weight / net weight	92.59lbs/77.16lbs	92.59lbs/77.16lbs
Intelligent connect	N/A	Bluetooth
Pulse monitor	N/A	Handle Bar
AUX-IN	N/A	3.5mm AUX-IN
Handle Switch	N/A	Handle Bar
Maximum weight capacity	264.55lbs	264.55lbs
Packing specification	62.60"L*29.13"W*11.42"H	62.60"L*29.13"W*11.42"H
Safety protection	1. Safety switch on the meter. 2. Overcurrent protective tube on internal control panel of treadmill.	

2.Products and Accessories

Please check carefully whether the goods in the packing box are complete and intact.

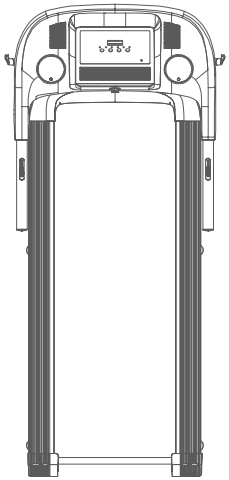

Host

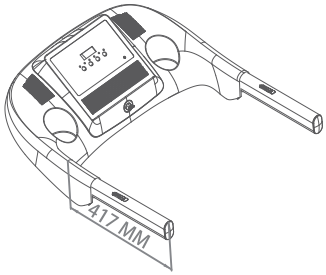

Grip Length of Handle

Our company shall reserve the right to technological improvement of the pictures and parameters of this product, which shall be subject to change without notice.

Table for Accessories:

Manual	B01 2PCS	B02 2PCS	B03 2PCS	B04 2PCS
B05 2PCS	Silicone oil bottle	6# 1PCS	5# 1PCS	Safe lock

3.Schematic Diagram of Structure and Function

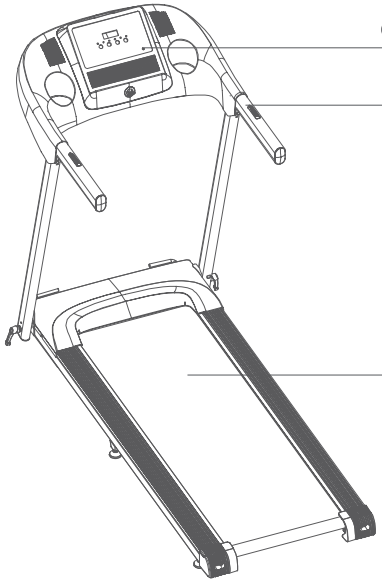

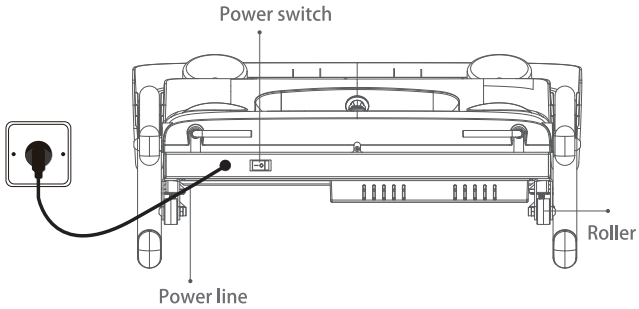

1.Open the package, and take the treadmill and accessory kit out of the box.

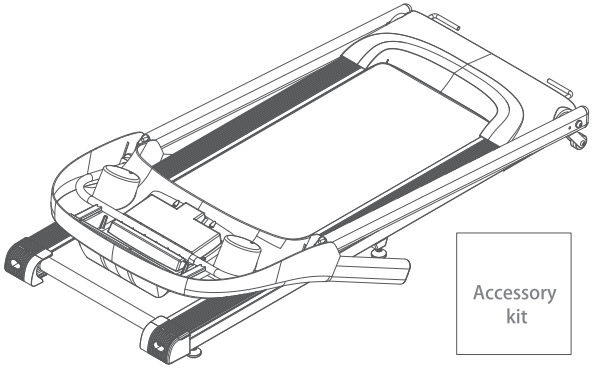

2. Assembly steps:
Unfold the column and electronic meter.

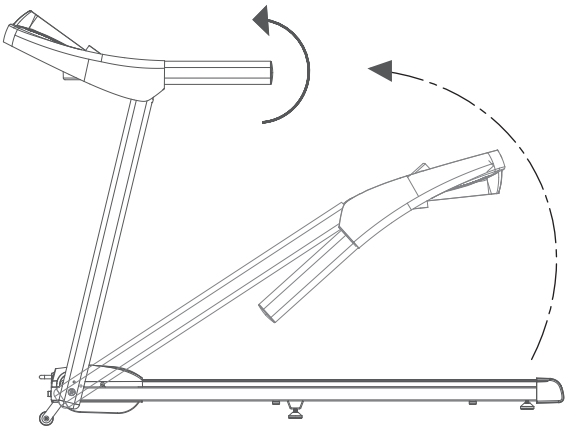

3.Assembly and fixation of column:
Use 6# spanner to lock the column by B01, B02 and B03 according to the diagram.

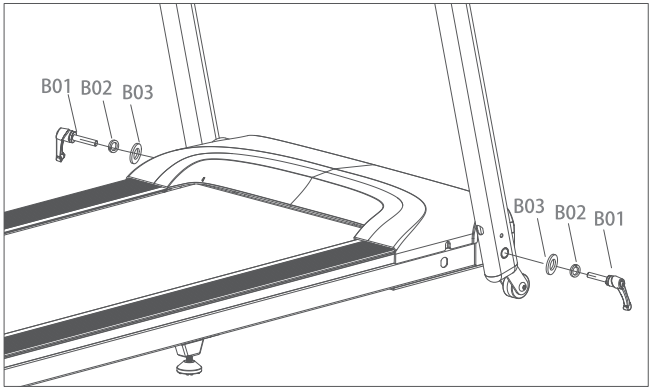

4.Use 5# spanner to lock the electronic meter and column by B04 and B05 according to the diagram.

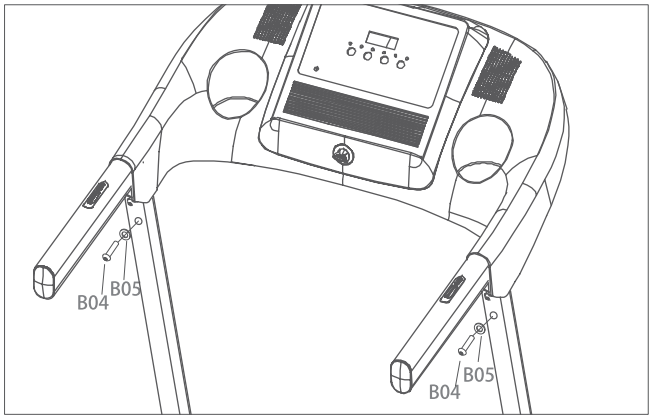

5.Connect the power and turn on the switch.

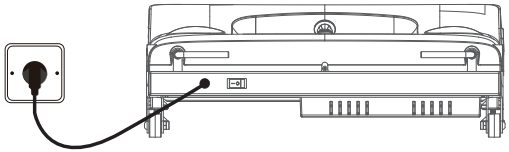

Notes: Connect the power after confirming that the treadmill is installed completely as per the installation instructions.

6.In the case of uneven ground, the front and back foot mats below the treadmill can be adjusted to enable the machine to reach the stable state, and then the nut at the upper end of foot mat is locked upwards.

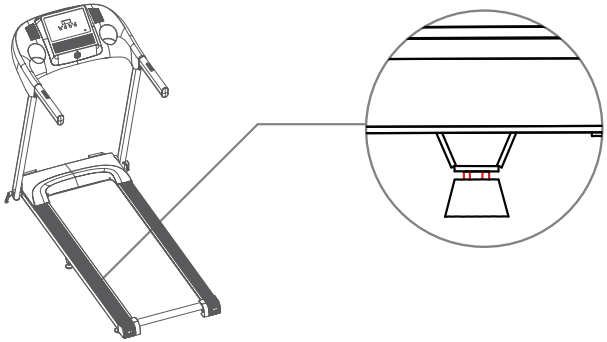

7.Insert the safe lock plate according to the diagram to use the treadmill normally.

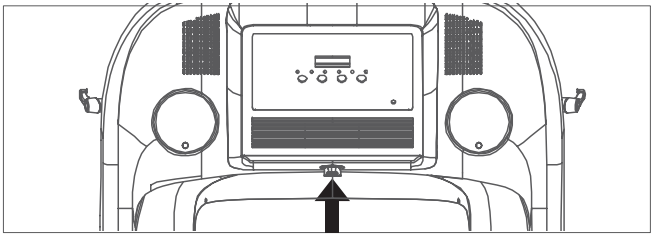

8.Pull the left and right supporting legs outward as shown in the diagram, turn 90 degrees in the direction as per the diagram, loosen and insert into the groove, and then keep the treadmill upright.

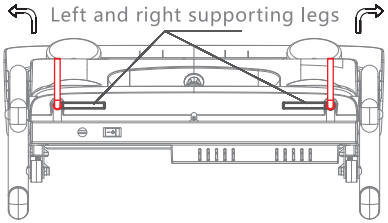

9.Keep the treadmill upright, hold the horizontal tube by both hands as shown below, uplift the treadmill, and reach the state as shown below.

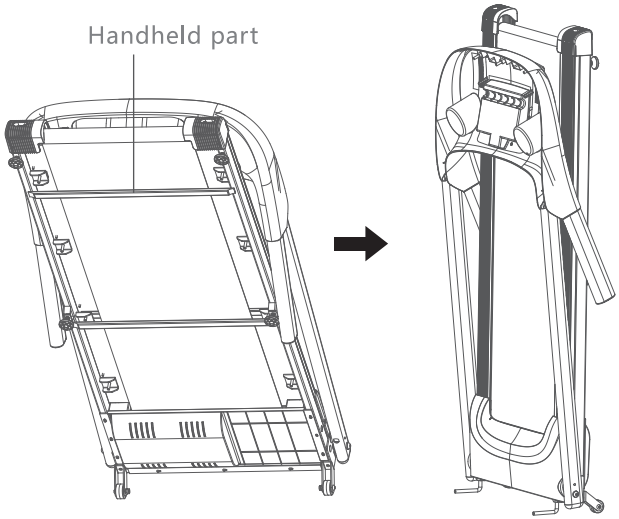

Operation Panel

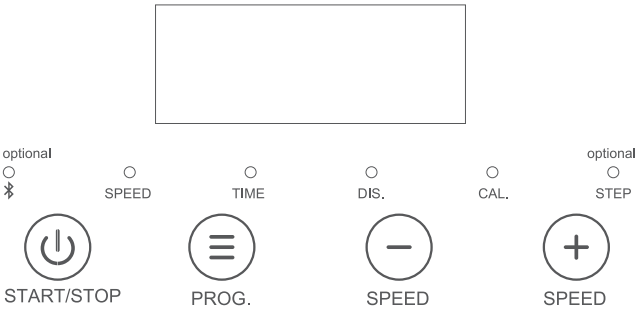

一、Keys and functions

1. Start / Stop: The treadmill starts or stops running in the case of pressing this key.

2. Function: Select 3 countdown modes (time countdown, distance countdown, and calories countdown) and 3 fixed programs (P1, P2 and P3) under the standby state. Switch the window display (speed, time, distance, calories, and step) under the running state of treadmill.

3. Speed plus: Adjust the speed, and add the selected item (speed, time, distance, and calories) value.

4. Speed minus: Adjust the speed, and reduce the selected item (speed, time, distance, and calories) value.

II. Mode

1. Time countdown

1.1 Under the standby state, press Function key once, and enter the time countdown mode. The time window flickers and displays “30:00”. Then press the Speed Plus and Speed Minus to select the time length. Adjust to 5:00 to the minimum, and adjust to 99:00 to the maximum.

1.2 Upon completion of adjustment, press Start key. The treadmill starts running at the lowest speed. Then press the Speed Plus and Speed Minus keys to adjust the running speed, and press Function key to switch the window. The speed window displays the current speed. The time window displays the remaining time. The distance window displays the distance run. The calories window displays the calories consumed. If the time displays “0:00”, the treadmill stops running.

2. Distance countdown

2.1 Under the standby state, press Function key twice, and enter the distance countdown mode. The distance window flickers and displays “5.0”. Then press the Speed Plus and Speed Minus to select the distance. Adjust to 0.5 km to the minimum, and adjust to 99 km to the maximum.

2.2 Upon completion of adjustment, press Start key. The treadmill starts running at the lowest speed. Then press the Speed Plus and Speed Minus keys to adjust the running speed, and press Function key to switch the window. The speed window displays the current speed. The time window displays the time run. The distance window displays the remaining distance. The calories window displays the calories consumed. If the distance displays “0”, the treadmill stops running.

3. Calories countdown

3.1 Under the standby state, press Function key three times, and enter the calories countdown mode. The calories window flickers and displays “100”. Then press the Speed Plus and Speed Minus to adjust the value of calories to be consumed. Adjust to 20 kcal to the minimum, and adjust to 990 kcal to the maximum.

3.2 Upon completion of adjustment, press Start key. The treadmill starts running at the lowest speed. Then press the Speed Plus and Speed Minus keys to adjust the running speed, and press Function key to switch the window. The speed window displays the current speed. The time window displays the time run. The distance window displays the remaining distance. The calories window displays the remaining calories. If the distance displays “0”, the treadmill stops running. If the calorie displays “0”, the treadmill stops running.

4. Fixed program P1

4.1 Under the standby state, press Function key four times to select the fixed program P1. After displaying “P1” for 3 seconds, the window flickers “30:00”. Press the Speed Plus and Speed Minus to adjust the running speed. Upon completion of adjustment, press Start key. The treadmill starts running. The time window displays the countdown time. The distance window displays the running distance. The calories window displays the calories consumed. The speed window displays the running speed in every section. This mode includes 10 sections. The running time is fixed and unadjustable. Press the Speed Plus and Speed Minus keys to adjust the running speed of current section during the process of running.

4.2 If the time window displays “0:00”, the treadmill stops running.

Number of sections / Speed	Section 1	Section 2	Section 3	Section 4	Section 5	Section 6	Section 7	Section 8	Section 9	Section 10
Speed mph	1.2	0.6	2.4	2.4	1.2	2.4	2.4	1.8	1.2	0.6

5. Fixed program P2

5.1 Under the standby state, press Function key five times to select the fixed program P2. After displaying “P2” for 3 seconds, the window flickers “30:00”. Press the Speed Plus and Speed Minus to adjust the running speed. Upon completion of adjustment, press Start key. The treadmill starts running. The time window displays the countdown time. The distance window displays the running distance. The calories window displays the calories consumed. The speed window displays the running speed in every section. This mode includes 10 sections. The running time is fixed and unadjustable. Press the Speed Plus and Speed Minus keys to adjust the running speed of current section during the process of running.

5.2 If the time window displays “0:00”, the treadmill stops running.

Number of sections / Speed	Section 1	Section 2	Section 3	Section 4	Section 5	Section 6	Section 7	Section 8	Section 9	Section 10
Speed mph	1.8	2.4	3.6	2.4	3.6	3.6	3.6	2.4	3.6	0.6

6. Fixed program P3

6.1 Under the standby state, press Function key six times to select the fixed program P3. After displaying "P3" for 3 seconds, the window flickers "30:00". Press the Speed Plus and Speed Minus to adjust the running speed. Upon completion of adjustment, press Start key. The treadmill starts running. The time window displays the countdown time. The distance window displays the running distance. The calories window displays the calories consumed. The speed window displays the running speed in every section. This mode includes 10 sections. The running time is fixed and unadjustable. Press the Speed Plus and Speed Minus keys to adjust the running speed of current section during the process of running.

6.2 If the time window displays "0:00", the treadmill stops running.

Number of sections / Speed	Section 1	Section 2	Section 3	Section 4	Section 5	Section 6	Section 7	Section 8	Section 9	Section 10
Speed mph	3.0	2.4	4.8	4.8	3.6	4.8	3.6	4.8	2.4	0.6

7. Use of handle switch button

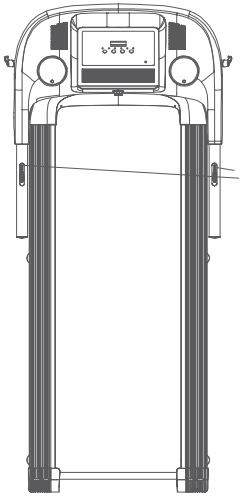

Handle switch button

Use switch button "START/STOP" on left handle to control the treadmill, start the machine or stop it. Use switch button "UP/DOWN" on right handle to increase the speed or decrease the speed. Use pulse detection devices on two sides of handles, and the pulse shows in the window of console.

8.General fault and troubleshooting method of control system:

Information code: E-7, safe lock falling off

Troubleshooting guide:

1.1 Check whether the safety switch is put in the designated position.

1.2 Check whether the safety switch plug is loose or fallen off.

1.3 Check or change the safety switch.

1.4 Check or change the display panel.

1.5 Check or change the lower control circuit board.

Information code:E-7

2. Information code: E-4, motor unconnected

Troubleshooting guide:

2.1 Check whether the motor line is loose or fallen off.

2.2 Check or change the motor.

2.3 Check or change the controller.

Information code:E-4

3. Information code: E-1, communication fault

Troubleshooting guide:

3.1 Check whether the communication line is loose, fallen off or damaged.

3.2 Check or change the electronic meter panel.

3.3 Check or change the controller.

Information code:E-1

4. Information code: E-5, overcurrent

Troubleshooting guide:

4.1 Check whether overloading.

4.2 Check whether the moving parts of machinery are stuck.

4.3 Check whether lacking the lubricating oil. If lacking the lubricating oil, the frictional force between running belt and running board will be increased.

4.4 Check whether the running board is severely worn out.

4.5 Check whether the running belt is severely worn out.

4.6 Check whether the motor connecting line has the short circuit.

4.7 Check or change the controller.

4.8 Check or change the motor.

Information code:E-5

Thank you for choosing our product.
The correct use of treadmill is the guarantee for your safety and convenience.
Please read the following contents carefully before you use the treadmill.

1.Please make sure you have installed the treadmill correctly before powering it on. For an easy plugging in, be careful not to cover the socket on the wall when placing your treadmill please.
2. Please plug power cord into the socket connected to ground for safety. The plug of the treadmill is special, if the power cord got damaged, please keep it away from our distributor or contact us directly.
3. The treadmill is the indoor equipment, please do not use it outdoor. The place where to place the treadmill should be clean and flat. Please keep it away from moisture. Please do not put the treadmill on anything such as thick blanket which may influence the air circulation under the treadmill or influence balance of the user. The treadmill is special equipment, so please do not to change it for any other usages.
4. Do not wear too large or too loose clothes when doing exercise, in order to prevent accidents from your clothes hung to any parts of the treadmill. We recommend you wear sneakers and gym shoes with rubber bottom.
5. Please do not take off protection cover casually. If you do need to open it for maintenance, please plug off the power cord first.
6. If it is the first time for you to use the treadmill, please do remember to grab the handrails till you feel comfortable.
7. If the treadmill accelerates suddenly or increases its speed automatically caused by the problem of electronic meter system, please pull out the safety key to stop the equipment instantly.
8. Please plug off and lay power cord away when not using the treadmill.
9. To avoid any risk, you should not allow children close to the treadmill when it is on.
10. There should be adult accompanying when children use the treadmill.
11. Before exercise, please warm up for 3-5 minutes, such as exercising joint and jogging.
12.Turn on power on the bottom to start the treadmill. Press “on/off” button, and digital display shows “Start” and then the treadmill begins to work. The system shall choose speed” 1” automatically, and the beginner could take this speed to warm up.
13.Grab the front ends of the handrails by two hands, step onto the treadmill and increase the speed to 1.5 to 3.0 slowly. Keep your body straight, relax as much as possible, and walk with the running belt. After the beginner could take this speed to warm up.
14. After getting familiar with the treadmill functions, you can preset the exercise time and adjust it according to your own physique.
15.On the digital display, you can clearly see the speed, time and distance of your exercise. Also, it can show the calorie you consumed and your heart rate on the digital display. During running, your heart beat rate could be measured by grabbing the chips on the two handrails.

16.**Warning!** Equipped with a 0.7m red magnetic safety thread (the red one, combined with safety lock together). If you find the treadmills abnormal or feel risk, please pull out this magnetic safety thread to stop the treadmill instantly in order to avoid accident occurrence.
17.While exercising, please clip the safety lock(red) thread on suitable position of your clothes, in order to pull it out to stop the treadmill immediately and ensure safety when accident occurs. When you do not use the treadmill, please well keep safety lock to avoid and third party to use it uncontrolled.
18.When finishing your exercise, please plug off and put away power cord well.
19.Warning! Touching any parts in motion is forbidden.
20.Heart rate sensor is not medical equipment. A lot of causes may lead to inaccurate test results, so the test results are only for reference.
21.**Warning!** If you feel any potential danger during the exercise, you should utilize the two side handrails to jump to ground or jump to two side foot boards urgently.
22.Warning! 78.74*39.37inch safety spare area behind the treadmill is required, so that you can have enough space to jump off the working treadmill when any danger occurs.
23.During exercise, 78.74(Length)*39.37(Width)*88.58(Height) inch free space is required for safe operation.
24.**Warning!** The treadmill is indoor equipment. Please do not use it outdoor. Exercising on the treadmill is aerobic exercise to strengthen the functions of your heart and lung. Muscle exercise is auxiliary.
25.**Warning!** Any adjustment devices that may interfere with the user's motion should not deviate from the design

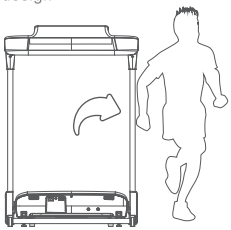

In the case of feeling the danger in exercising, it is required to urgently jump to the ground or jump to the pedal platform at both sides by the handle.

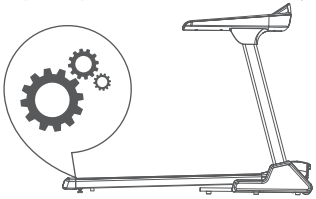

Prevent from getting caught. Please do not tread.

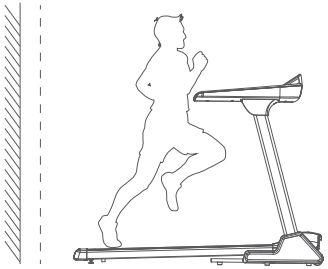

The safety zone of 78.74*39.37inch must be available behind the treadmill.

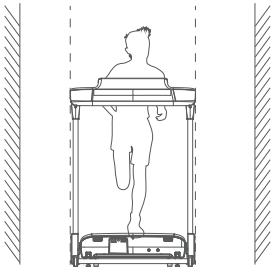

The required free space for safe operation is 78.74 inch (length) × 39.37 inch (width) × 88.58 inch (height). Please do not let the child get close to the electric treadmill in use, to prevent the danger.

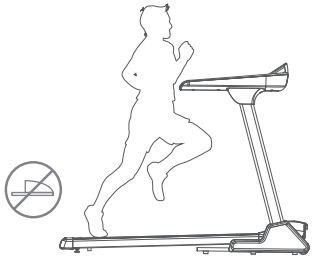

Please unplug the power line when the treadmill is not used.

Please clamp the clip of safe lock on the clothes during using. (In the case of accidents, terminate the motor running immediately after pulling off the safe lock.)

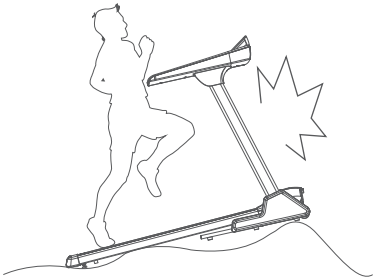

It is strictly prohibited to use the treadmill on the uneven ground.

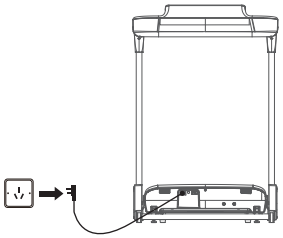

Please unplug the power line when the treadmill is not used.

7.Safety Precautions

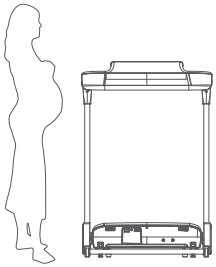

⚠ The elders and pregnant women should use it with caution.

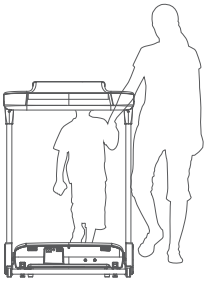

⚠ The juveniles should use accompanied and guided by the adult.

Tips:

1. The beginner should be firstly familiar with the function knobs on the panel before using the treadmill.
2. Please do not stand on the running belt on startup. Stand on the plastic anti-skid plate at both sides of treadmill from the side, to prevent from falling.
3. It had better change the sports wear before running. Do not wear the jeans and leather shoes for exercising.
4. Please do not play and fight with others while using the treadmill, in case of danger. It is strictly prohibited to jump off the treadmill in the process of running.

8.Maintenance Guidelines and Instructions

You should maintain the treadmill yourselves. It is suggested that

Warning: Please be sure to unplug the electric treadmill before cleaning or maintaining the product.

a) Clean and check this equipment periodically. The abrasions and damages such as running belt, belt, running board and connection point should be checked frequently. The equipment can keep safe for some time after pure repair.

b) Special attention should be paid to the easily worn components, such as running belt, belt, running board and connection point.

c) Check those defective parts immediately or leave this equipment unused till repairing.

d) Adjust the tension and deviation position of running belt.

I. Use

To maintain your electric treadmill better and prolong the machine life, we recommend you turn off the power after using continuously for 2 hours, and then let the machine rest for 10 minutes before using.

If the running belt is too loose, the slipping will occur during running. If the running belt is too tight, the motor performance may be reduced, and the abrasion of roller and running belt will be intensified. In the case of proper tightness of the running belt, both sides of the running belt can be lifted about 50-75 mm away from the running board by hands.

II. Cleaning

The comprehensive cleaning will prolong the life of electric treadmill greatly.

Remove the dust periodically to keep the components clean. Be sure to sweep the exposed parts at both sides of the running belt, to reduce the stacking of impurities under the running belt. Make sure the cleanness of sports shoes. Avoid bringing the foreign matters into the running belt, to abrade the running board and running belt. The surface of running belt must be rinsed with the wet cloth in soap. Attention should be paid not to spray the water on the electric elements and under the running belt. Open the motor protection cover and collect the dust and clean the motor at least once every year.

III. Lubrication

After using for some time, the treadmill must be lubricated by the specially allocated methyl silicone oil.

1. Suggestion on lubrication interval:

Users with lightweight usage (using for less than 3 hours every week): Lubricate once every 6 months

Users with middleweight usage (using for 3 hours to 5 hours every week): Lubricate once every 3 months

Users with heavy weight usage (using for more than 5 hours every week): Lubricate once every 1.5 months

We recommend you purchase the lubricating silicone oil from local dealers or contact our company directly.

2. Lubricating method:

①The running board should be lubricated duly as mentioned above, but can not be lubricated excessively. More lubricants are not the better. Remember that the reasonable lubrication is an important factor of prolonging the service life of treadmill.

② For the method of checking whether lubricating again as needed, it is only required to hold the running belt, and touch the center at the back of running belt by your hands as much as possible. If your hands are stained with the silicone oil (somewhat moist feeling), it indicates that lubricating is not needed. If the running board is dry and your hands are not stained with the silicone oil, the lubricating silicone oil should be applied.

3. Steps of applying the lubricating silicone oil on the running board:

Notes: The notch is about 5mm.

a) As shown in Fig., cut open the oil bottle neck, turn on the lubrication long cap, tear the internal sealing paper, and then screw the lubrication long cap. To connect with the lubrication hole well, the notch should not be too long, and should be about 5mm or shorter, to enable the oil to flow out.
b) Under the shutdown state, open the running belt from front to back, drip the oil over the running board, then start the treadmill slowly, tread on the middle of running belt gently, and keep for about a few minutes, to enable the silicone oil to be totally absorbed by the running belt.

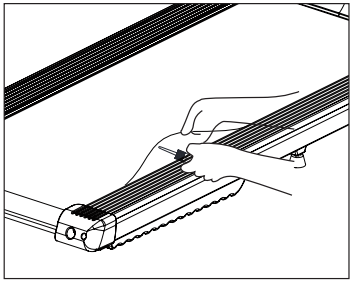

2.2 Tightness adjustment of running belt
The running belt should be adjusted before delivery and after installation of all treadmills, but the treadmills may be loose after using for some time. For example, the user has the phenomenon of pause and slipping during running. In the case of such phenomenon, the adjusting bolts of running belt should be adjusted synchronously at left and right with semi-circle as the unit clockwise. (If tightening the running belt, conversely, operate anticlockwise.) In the case of too loose running belt, the running belt and roller will be slipping when your feet are put on the running belt. But too tight running belt is bad, to easily increase the load of motor, and damage the motor, running belt and roller, etc.

2.3 Alignment of running belt
1. Put the electric treadmill on the flat ground.
2. Use the electric treadmill and run at about 3.5 km/h.
3. If the running belt is tilted to the left, rotate the adjusting bolt at left for one-half circle clockwise, and then rotate the adjusting bolt at right for one-half circle anticlockwise.
4. If the running belt is tilted to the right, rotate the adjusting bolt at right for one-half circle clockwise, and then rotate the adjusting bolt at left for one-half circle anticlockwise.

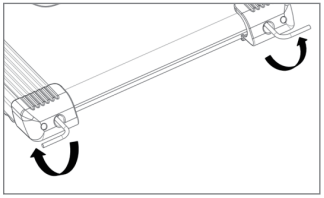

If the running belt is tilted to the left, adjust in the method as above.

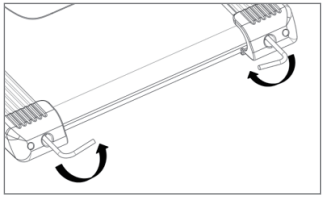

If the running belt is tilted to the right, adjust in the method as above.

2.4 Adjustment of driving belt
The driving belt should be adjusted before delivery of all treadmills, but the treadmills may be loose and slipping after using for some time. It is mainly adjusted voluntarily by the users.
Adjustment steps (as shown at right):
① Rotate the left hole anticlockwise by the internal hexagonal wrench.
② Rotate the right hole clockwise by the internal hexagonal wrench.
③ The adjustment range is subject to non-slipping with load.
Notes: Clean the inclusions of belt groove and belt pulley groove periodically.

If it is your first time to use electronic running machine, you need to read the below content:

Preparation
Before exercise, it is better to know your own health status in order to make an exercise plan based on it. It is recommended to consult a doctor or a professional to get multiplier effects.
Before first use of the running machine, please stand by it and learn how to control it, for example: start, stop, adjust speed and etc. After getting familiar with it, you can start to use the running machine. Stand on the plastic anti-slip plates on the two sides of the trach and seize the handrails by two hands. Then, turn on the running machine and adjust the speed around **1.0-2.0 mph** (low speed). Keep your body straight and your eyes look forward. Step on the running belt carefully and relax yourself until you can gradually follow the speed. When you are comfortable, you may slowly increase the speed to 1.9-3.1 mph.Keep this speed for about 10 minutes, and then slow down it until it stops. For your first time, please do not run at high speed to prevent from falling down.

Exercise
Walk about 0.62miles at a fixed pace and record the time it spent. It may take 15-25 minutes. When the speed is at **3.0 mph** , it shall take you about 20 minutes for a distance of 0.62miles.After you can easily do it for a few times, you can gradually increase the speed. Keep it for 30 minutes, and you can get a good exercise. Before you start to walk, please be patient and be aware that this exercise is good for your health during the whole life time. It is not a magic to change something overnight.

The Frequency of Exercise
Your target is to exercise 3-5 times every week, and each time exercise for 15-60 minutes. It is better to make an exercise schedule based on your body status, rather than do it according to your own preferences. You can control the intensity by adjusting the speed and exercise time.

Exercise Time
Shortcut: 15-20 minutes exercise is a good way to save time. Warm up for 5 minutes at **2.5-3.0 mph** , and then increase speed by **0.2 mph** increment per minute until you feel at a suitable speed, and keep running for about 45 minutes. You will fully enjoy this exercise.
The above content is for reference only. Please consult professionals for more details.

Wearing
The only thing you need is just a pair of good shoes, and we recommend you to wear running shoes or gym shoes during exercise. Meanwhile, please be careful that there is nothing stuck on the shoes in order to avoid from anything dropping into running machine and then damaging the running plate and belt. Clothes should be comfortable and suitable for sports, and we recommend you to wear the breathable sportswear made from cotton.

No matter how fast you walk, it is better to do stretch exercises first. Warm muscle is easier to stretch, so please spend 5-10 minute to warm up first. Then stop and use the below methods to do stretch exercises. Stretch for 5 times and at least 10 seconds for each leg in warm-up, and do it again after exercise.

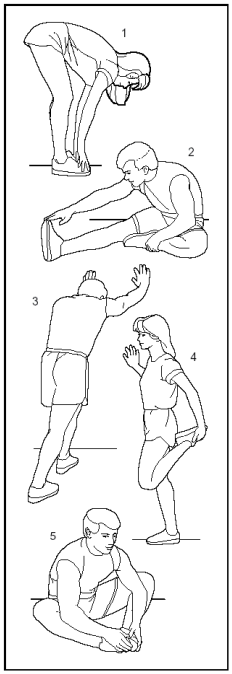

1. Stretch down
Keep your knees slightly curved, and slowly bend your body forward. Relax your back and shoulder and touch your toes with your hands (see figure 1). Keep this for 10-15 seconds, and then relax. Repeat it for 3 times.

2. Foot tendon stretch
Sit on a clean cushion, stretch one leg out and adduct another leg to cling the inner side of the leg stretched-out, and then touch the toes by hand (see figure 2). Keep this gesture for 10-15 seconds and then relax. Repeat three times for each leg.

3. Foot and heel tendon stretch
Stand with your hands on the wall and separate your two legs forward and back. Lean toward the wall, and keep the back leg straight and put its heel to floor (see figure 3). Keep this gesture for 10-15 seconds and then relax. Repeat 3 times for each leg.

4. Quadriceps stretch
Hold wall or table by your left hand for balancing, extend your right hand backward to grasp your right ankle, slowly pull the heel toward your butt until you feel tightness of the front muscle on your thigh (see figure 4). Keep this gesture for 10-15 seconds and then relax. Repeat 3 times for each leg.

5. Sartorius muscle (inner muscle of thigh) stretch
Sit down with two soles facing each other and two knees outwards. Grasp the two feet and pull them towards your groin. Keep this gesture for 10-15 seconds, and then relax. Repeat 3 times.

Exercise safety measures
Please consult a professional before exercise. He can give you some suggestions about exercise frequency, intensity and duration according to your age and physical condition. During exercise, if you feel chest choking or chest pain, irregular heartbeat, breath difficulty, dizziness or any other discomfort, please stop immediately. And consult professionals before you resume the exercise.