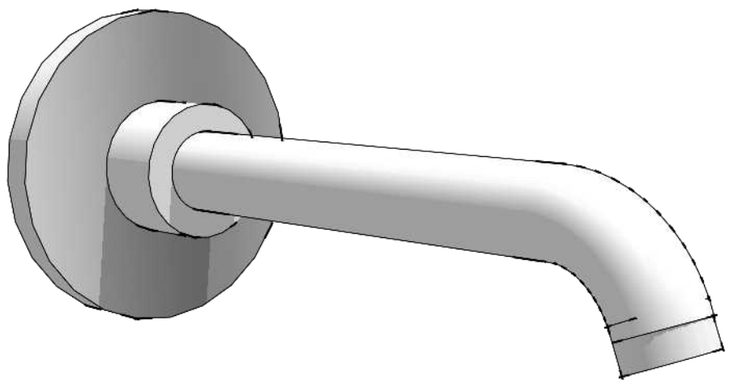

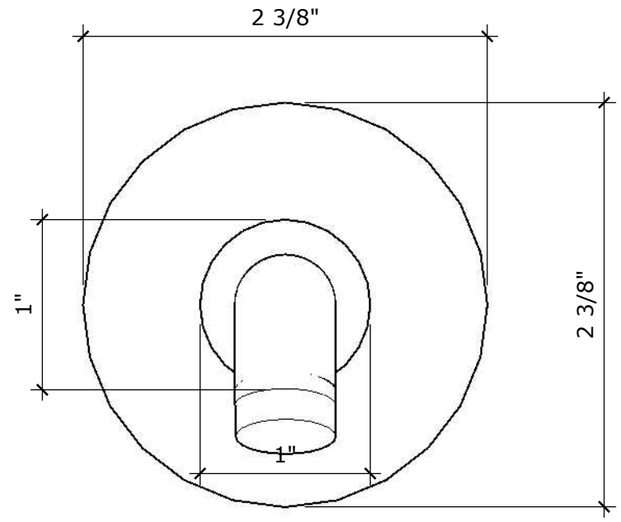

FEATURES:
BLACK
5 1/2" ROUND SPOUT
3/4" MALE INLET - NPT

FINISH:
MATTE BLACK

CODE & COMPLIANCE

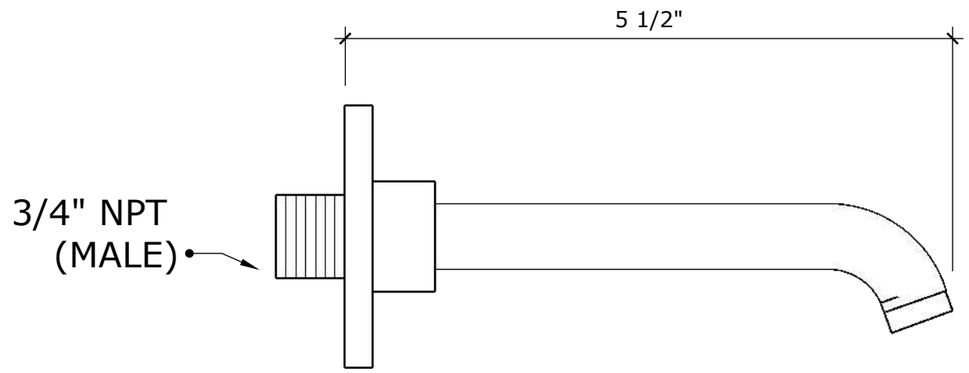

VENETO BATH

VEN - CST -1002
TUB SPOUT

LAST REVISION: 17/06/2022