Installation Instruction

Before You Begin

1. Shut off the main water supply.
2. Do not disassemble the main body, as it has been installed & commissioned correctly & precisely before leaving the factory.
3. To avoid the faucet from jamming, DO flush the water pipe before installation.
4. After installation, make sure every joint is safely sealed (NO LEAKAGE).
5. Make sure to connect the hot/cold inlet pipe correctly, if standing in front, hot water pipe connecting to the left and cold water pipe connecting to the right.
6. It is recommended that installation of the product be done by a professional plumber.

Cleaning & Maintenance

To keep product clean and shiny follow the instruction below.
1. Flush with clean water and dry with soft cloth only.
2. Do not use any detergent, polisher, sane-cloth, or a scraper.
3. Do not use acid detergent.

Installation

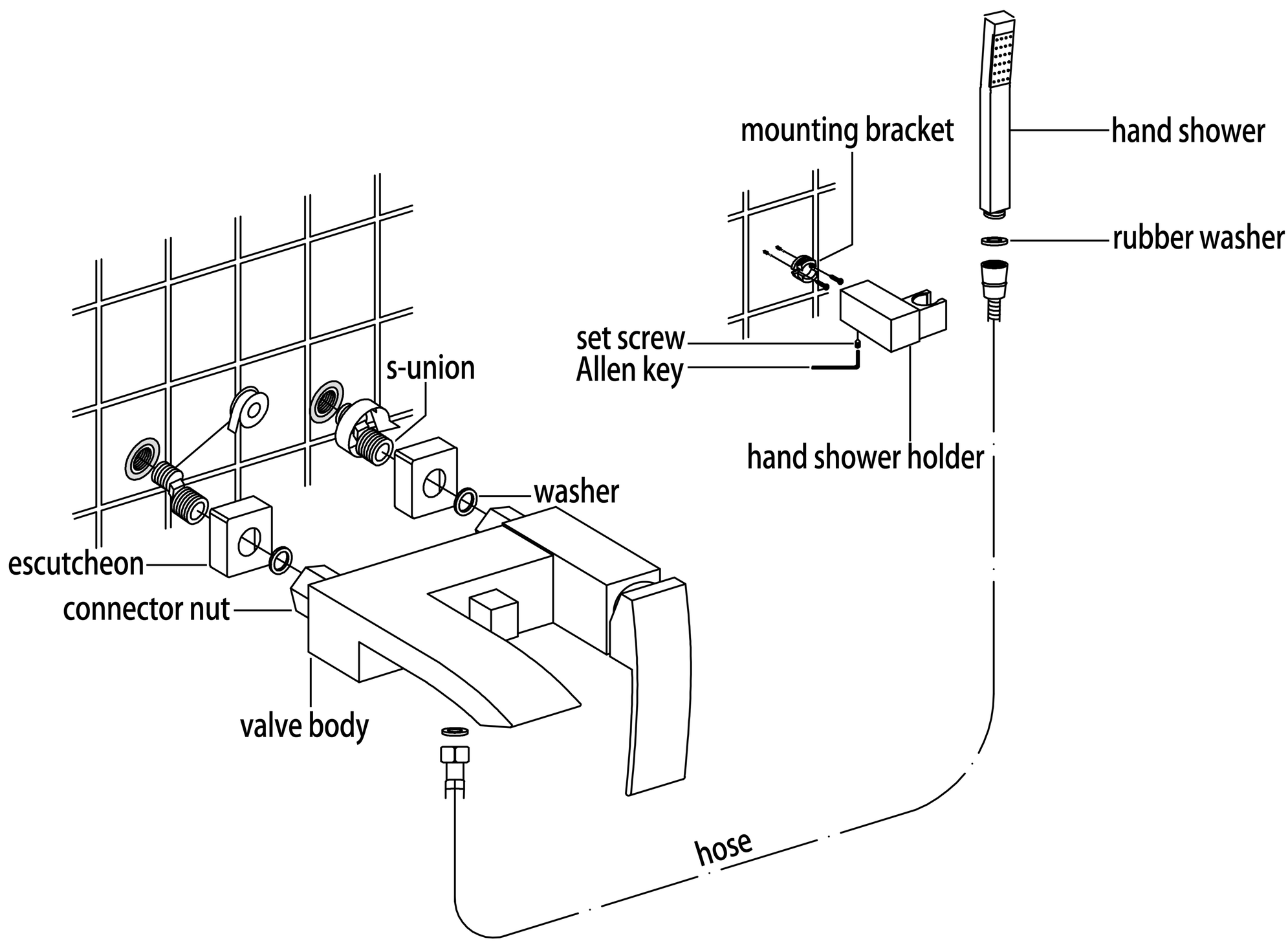

1. Wrap the threads of the s-union with Teflon tape.
2. Screw the s-unions into the female fittings of water supplies. Make sure that the s-unions are level. Place the escutcheons onto the s-unions.
3. Add washers to the connector nuts of the valve body. Thread and tighten the connector nuts onto the s-unions.
4. Fix the mounting bracket to the wall with screws. Attach the hand shower holder to the mounting bracket and tighten the set screw with Allen key.
5. Add rubber washers at both ends of the hose. Screw one end into the outlet of the valve body and the other end into the hand shower.
6. Place the hand shower in the hand shower holder.