STOVAX

EXETER DEVON ENGLAND
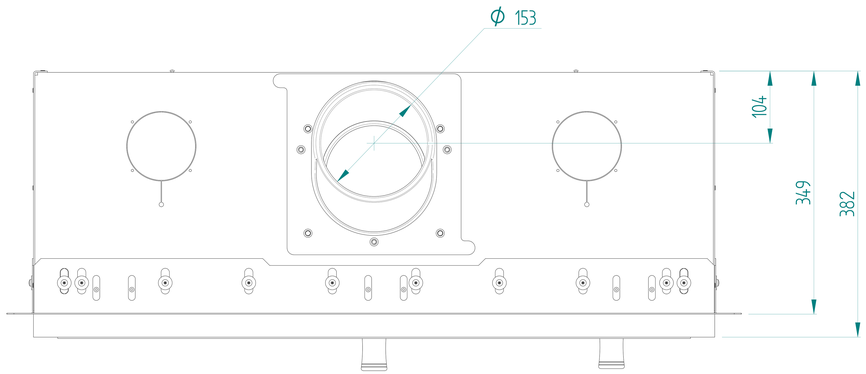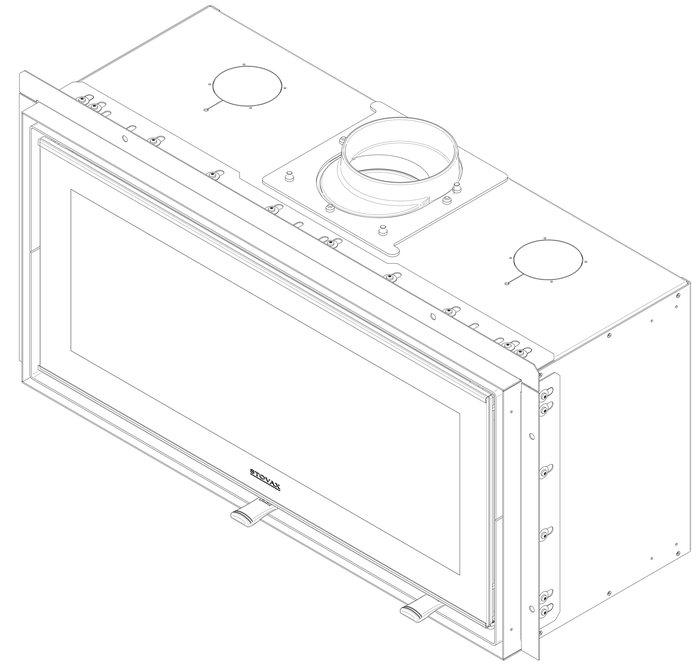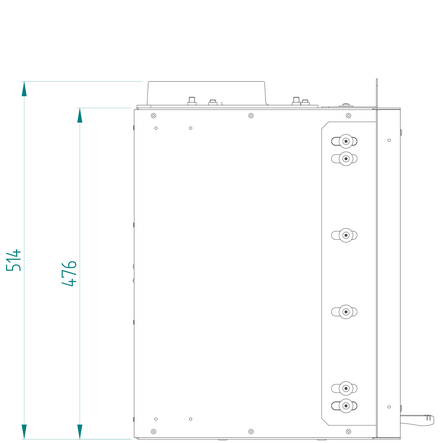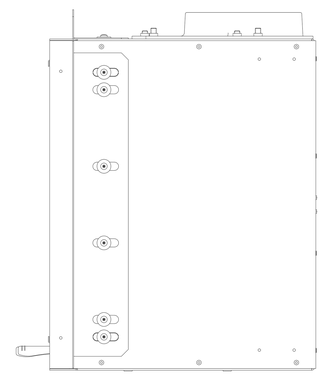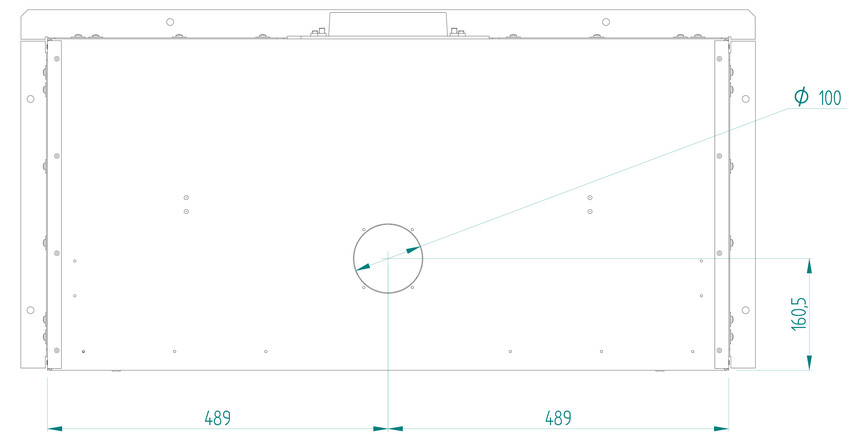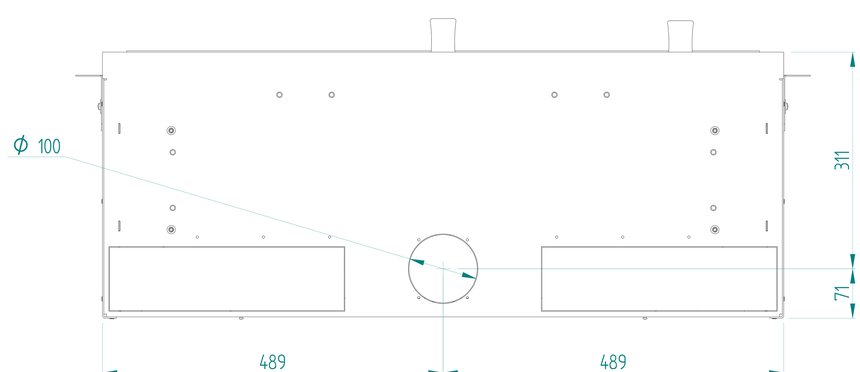
STUDIO AIR 2
CASSETTE
SCALE 1:1
ISSUE 1
DRAWN - 27/06/2022
UNITS - MM
PR11156