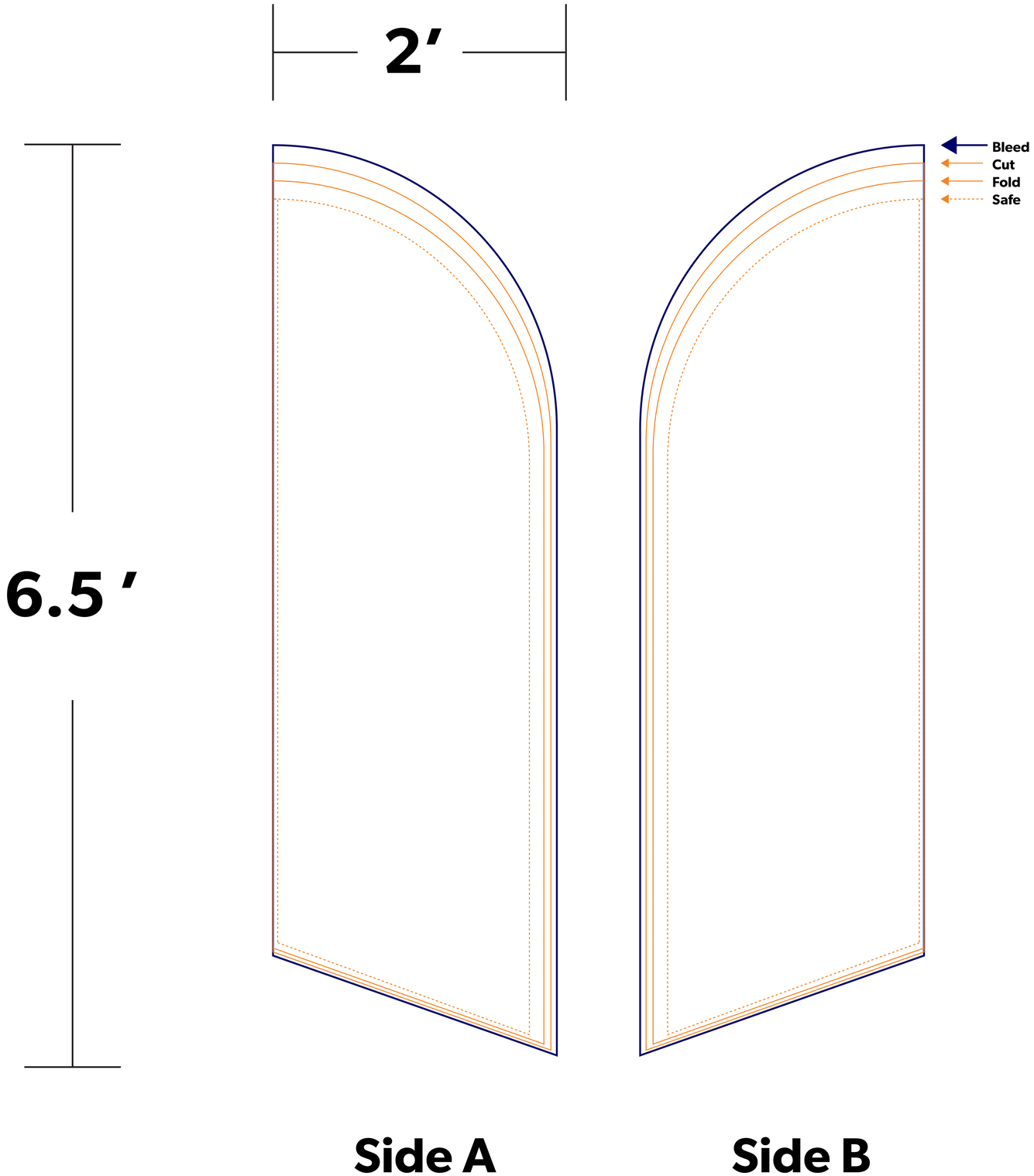

SepiaPrint

Small Feather Flag

Color mode: CMYK
Typography: Must be converted to Outline
Save as PDF, Tiff or JPG