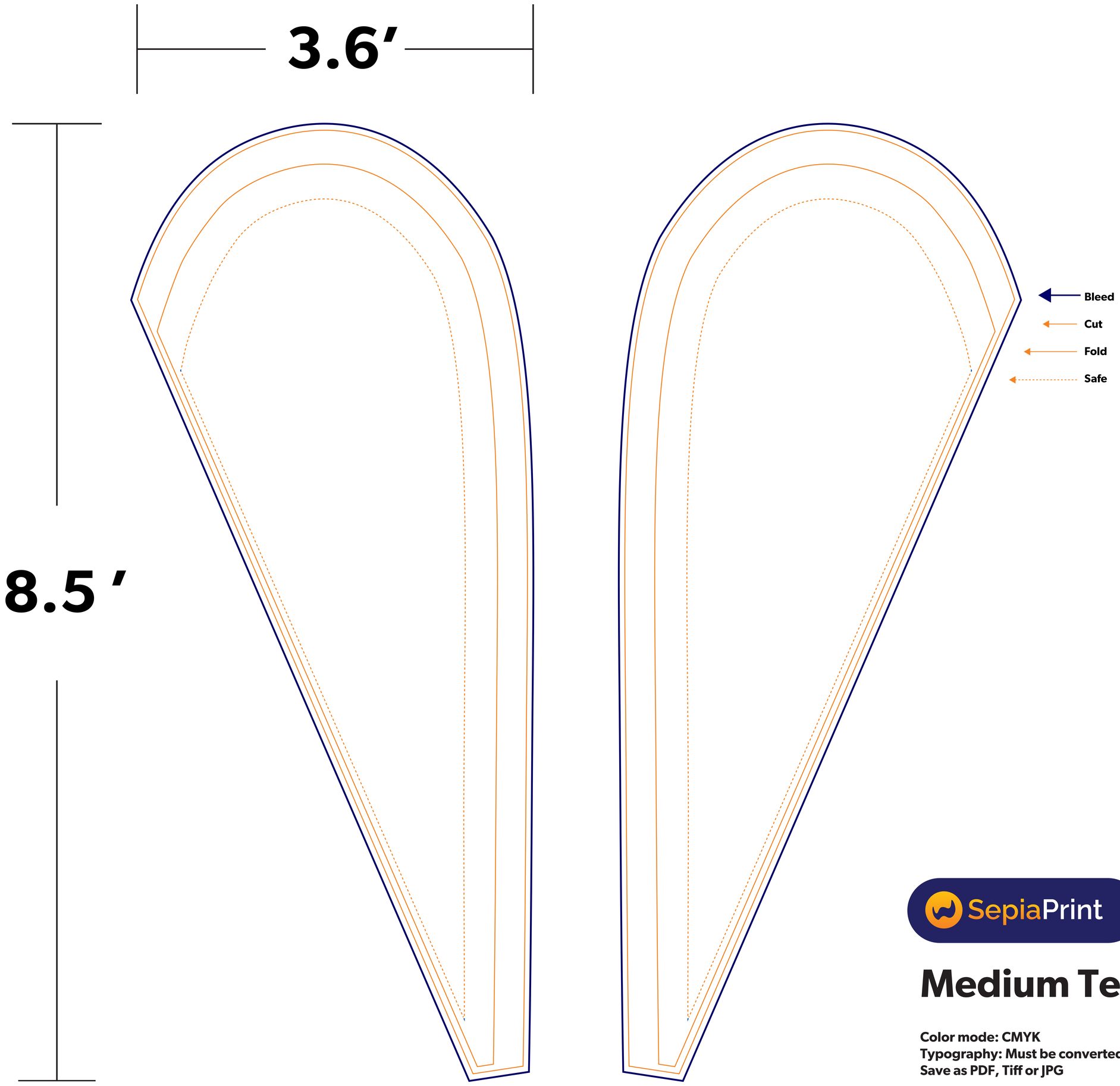

SepiaPrint

Medium Teardrop Flag

Color mode: CMYK
Typography: Must be converted to Outline
Save as PDF, Tiff or JPG

Side A **Side B**