Bathroom Taps

TEC ROUND

Description

Thermostatic shower column with built-in wax thermoelement with savetouch technology, round shower head, telescopic slide rail with slider bracket and additional "JOY" hand shower. With connections of 1/2 "and with a distance of 150±20mm between them. It includes non-return valve and safety stop at 38ºC. The flow rate at 3 bar of the hand shower is 8,84l/min and of the shower head 8,68 l/min.

Finish

black
100245943

Other Finishes

chrome
100220170

Flow rate diagramme

Pressure (bar)	**0**	**1**	**2**	**3**	**4**	**5**
Flow - hand shower (l/min) (±15%)	0	6.3	8.4	8.7	8.9	9.2
Flow - fixer shower (l/min) (±15%)	0	5.1	7.3	8.8	9.4	9.1

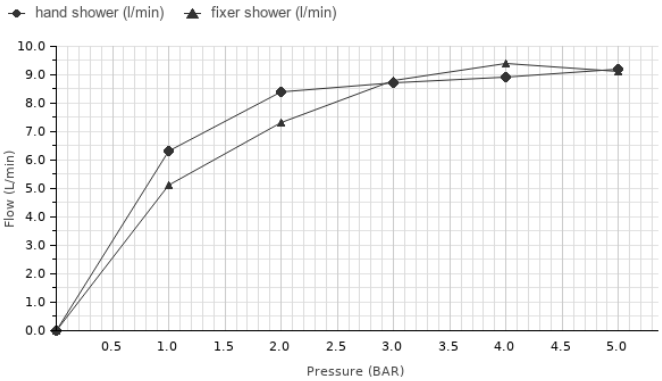

Technical drawing

Dimensions in mm

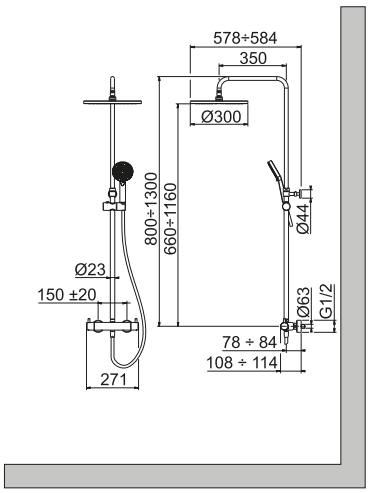

noken
PORCELANOSA BATHROOMS

Warranty:For a warranty or other information on this product, visit our Web address: www.noken.com

Legal disclaimer: All details provided by the NOKEN´s Product has an information purpose without any contractual value. In order to obtain further information about the materials and their installation please visit our showrooms. NOKEN reserves the right to modify or delete any information on this site. The images and colours shown in this site may differ from the real ones.

© 2021 noken | Edition: 12/10/2021 UK Ref.143957