Accessories

FORMA

Description

Wall mounted brush holder

Finish

chrome
100094169

Technical drawing

Dimensions in mm

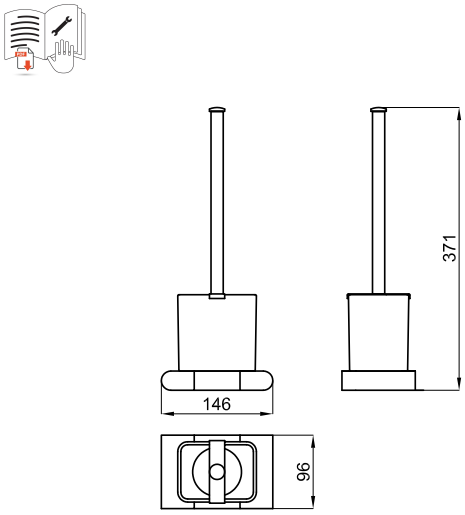

noken
PORCELANOSA BATHROOMS

Warranty:For a warranty or other information on this product, visit our Web address: www.noken.com

Legal disclaimer: All details provided by the NOKEN´s Product has an information purpose without any contractual value. In order to obtain further information about the materials and their installation please visit our showrooms. NOKEN reserves the right to modify or delete any information on this site. The images and colours shown in this site may differ from the real ones.

© 2022 noken | Edition: 14/11/2022 UK Ref.134112