A	Overall Height	42 1/4"
B	Overall Depth	40 1/2"
C	Overall Width	40 1/2"
D	Floor to bottom of Skirting	39-1/2"
	Umbrella Hole 1-3/4"	
	Weight 133Lbs.	

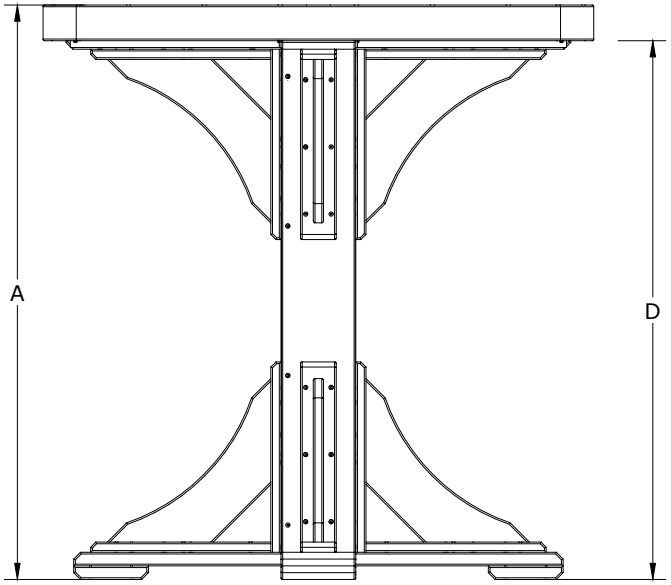

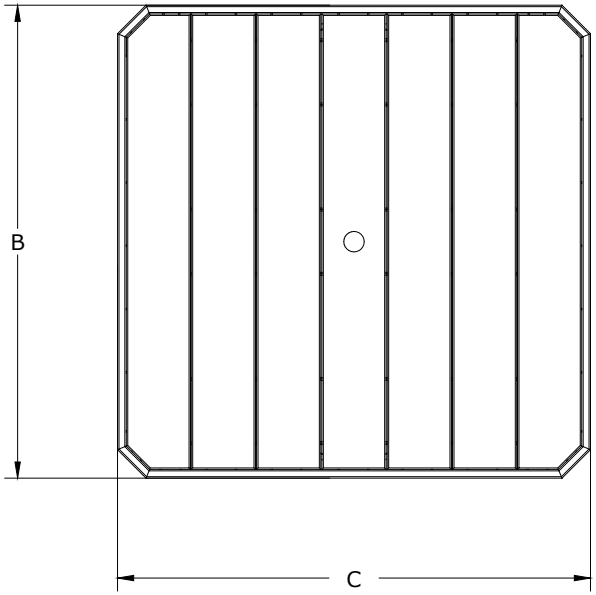

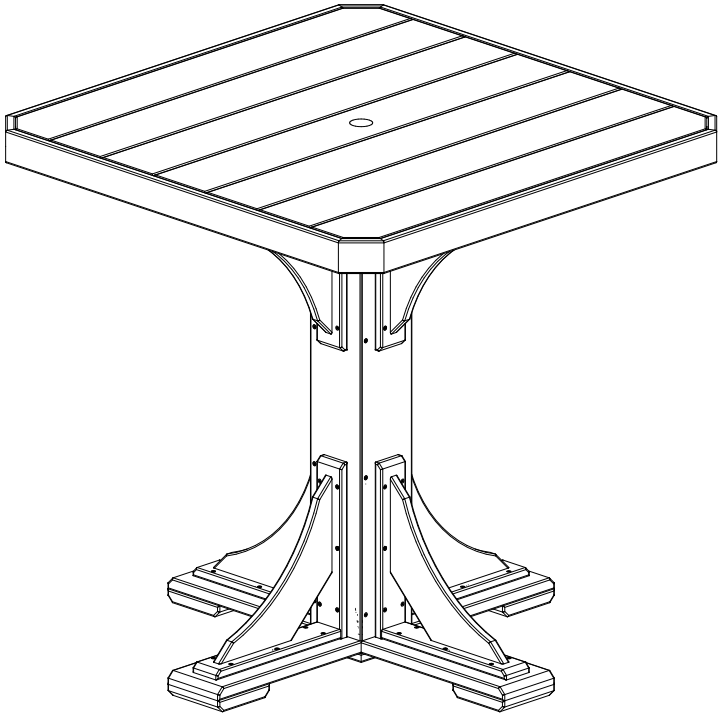

Poly 41 Square Table Bar Height Dimensions

10/31/ 2017	R.M.