ABLATUM DISINFECTION SERIES

TERMINARE

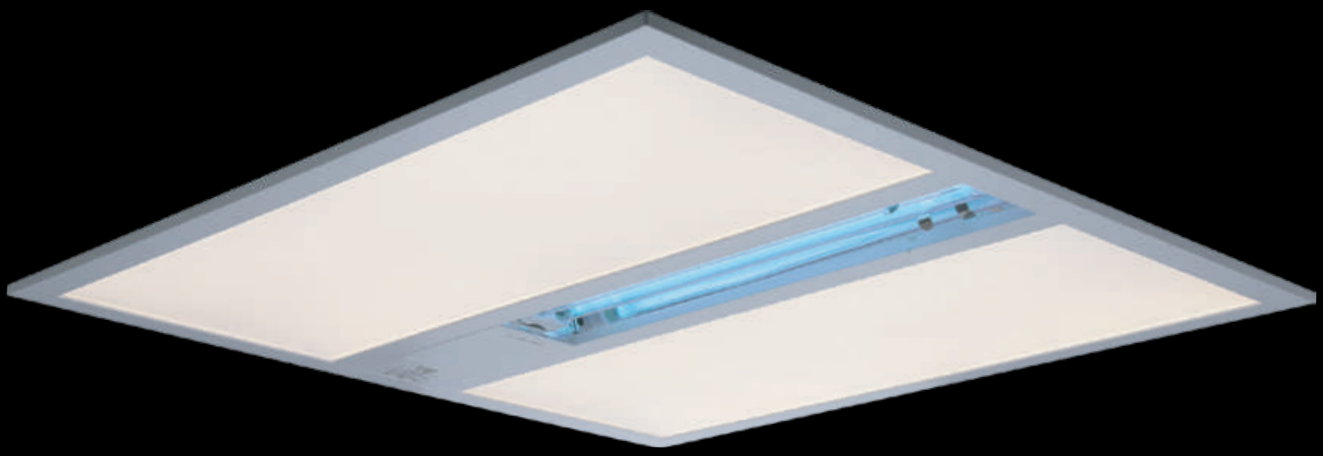

jibe

Ablatum Terminare

UVC Disinfection Panel Light

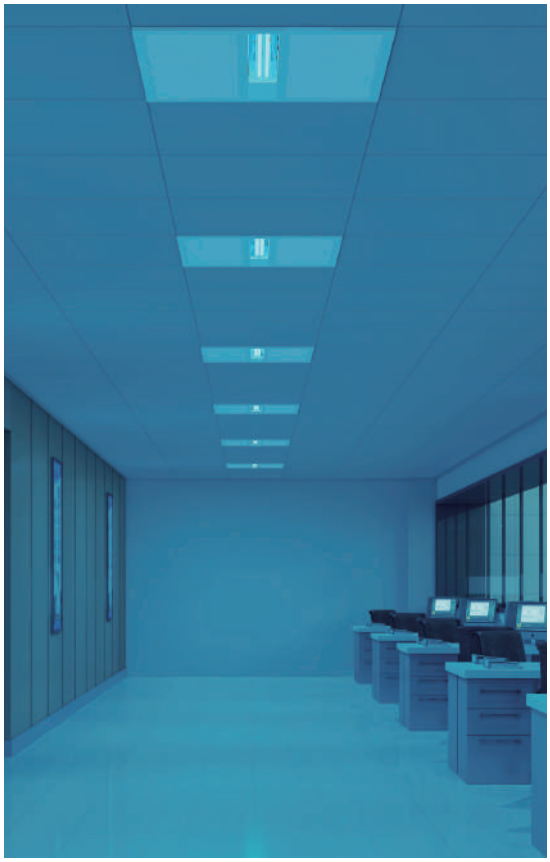

Model:Ablatum Terminare

Dimmension	Input Voltage	Luminaire Power	Luminous flux	UV-C Power	Wavelength	Base
595*595*44mm	AC220-240V	38W	3800lm	36W	253.7nm	2G11
295*1195*44mm	AC220-240V	32W	3200lm	30W	253.7nm	G13
595*1195*44mm	AC220-240V	65W	6500lm	30W	253.7nm	G13

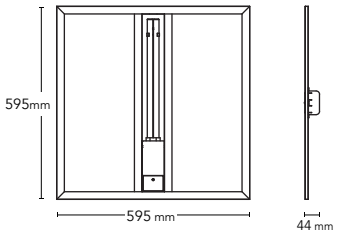

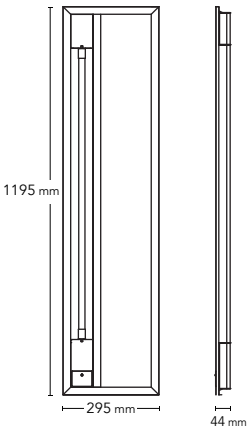

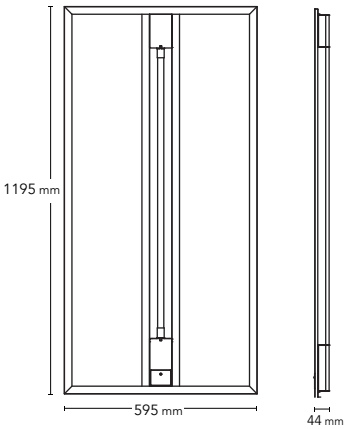

Ablatum Terminare Remote Control

3000-6500K CCT tunable
10%-100% Dimmable

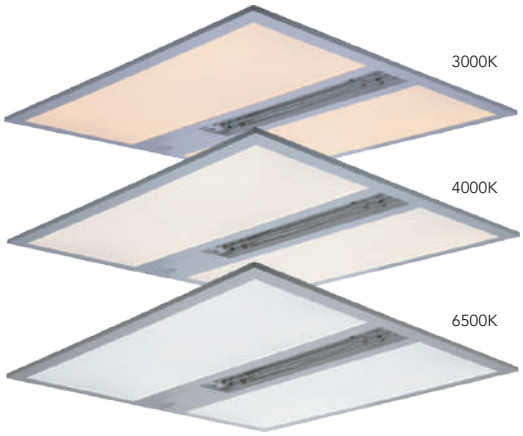

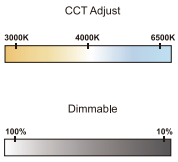

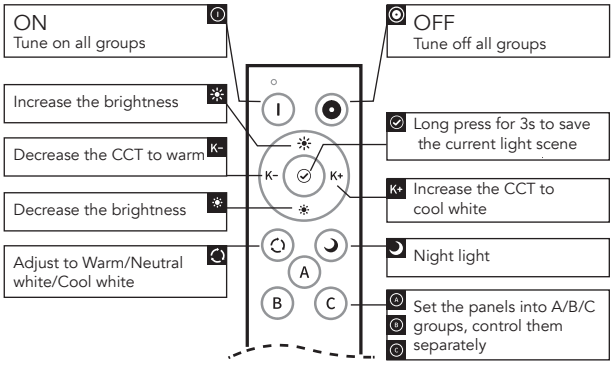

Options for Ablatum Terminare UVC Control

Wall switch control

Remote control

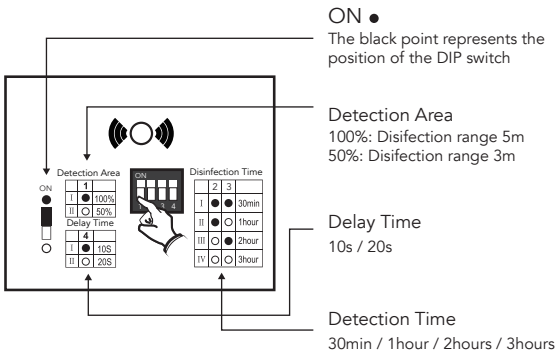

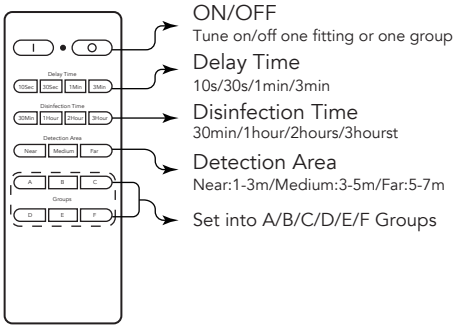

Motion Sensor

The Terminare UVC lamp will automatically turn off when someone approaching.

Application: Hospital, School, Office,Industry, (Food) Retail, Store, Museum, Public Transportation, etc.

Installation Manual

Recessed

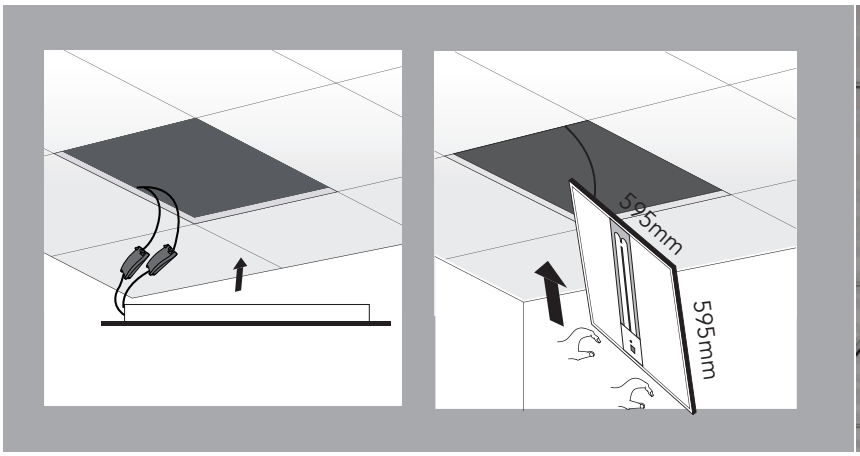

Surface mounted

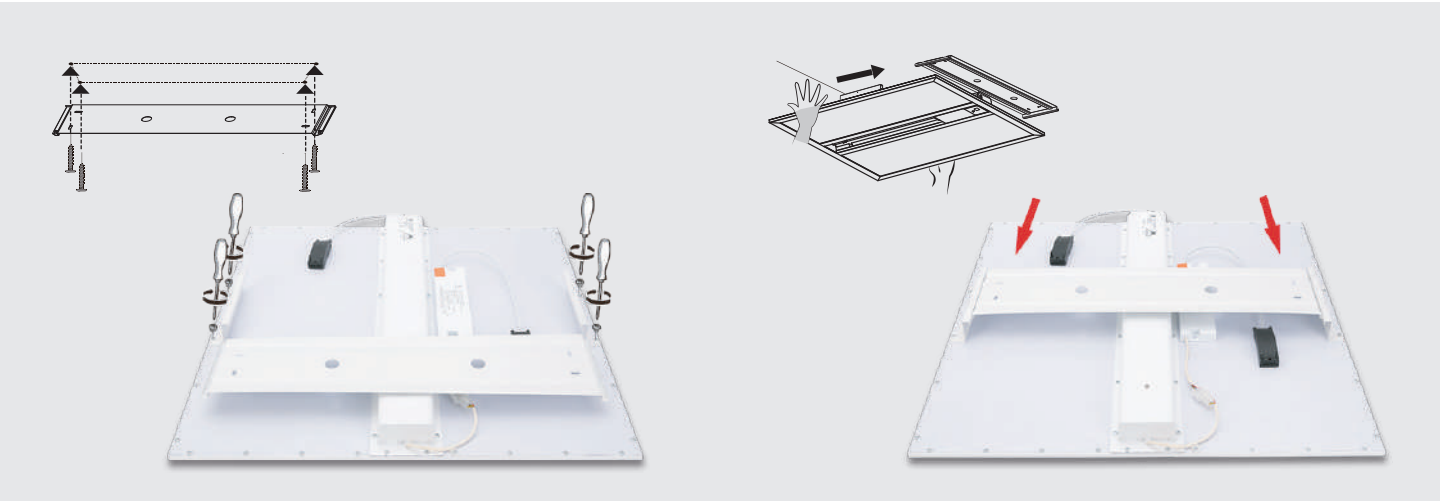

UVC STERILIZATION PANEL LIGHT

NEW

WALL SWITCH | REMOTE | APP | IP20

WARM 3000K | NATURAL 4000K | WHITE 5700K | SUNRISE/SUNSET 2200K-6500K

CCT ADJUST | DIMMABLE

- Model: **AXLIGHT TERPANEL**
- Input voltage:AC220-240V
- Body Material:Aluminum
- Cover Material:PS
- Power:Luminaire 36W/UV tube 30W
- Fixation Mode:Recessed/Surface Mounted
- Dimension

UVC Sterilization Panel Light

One device for two using
Safety, high efficiency and saving space.

Killing 99.9% of virus

One lamp can cover an area of about 30㎡.

More Safe by using Intelligent radar sensor

it can automatically turn off
the UVC germicidal lamp
when sensed object moving.

Application

Office/Washroom/Kitchen/Laboratories/
School/Supermarket/Home Etc.

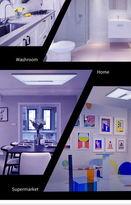

Two styles options for choice

Remote control or wall switch control UVC
sterilization options for choice

Lighting remote control

Can be remote dimming color
in a range of 10m

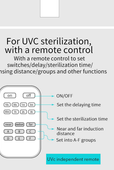

For UVC sterilization, with a remote control

With a remote control to set
switches/delay/sterilization time/
sensing distance/groups and other functions

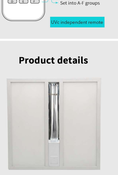

Product details

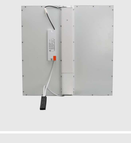

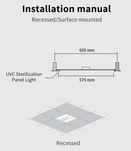

Installation manual

Recessed/Surface mounted

Recessed

Surface mounted

JIBE LIGHTING — HEADQUARTERS
Hogebrinkerweg 14V – 3871 KN Hoevelaken
Netherlands Tel: +31 (0)33 844 7111
info@jibe.lighting – www.jibe.lighting

LED THERE BE LIGHT

JIBE LIGHTING — GERMANY
Marie-Curie-Ring 38- 63477 Maintal
Germany Tel: +49 (0)6181 90 90 509
Mob : +49 (0)162 26 36 614
fax : +49 (0)6181 61 01 618
s.fischer@jibe-lighting.de

JIBE LIGHTING — NORTH AMERICA
5917 NW 63 Way - Parkland FL 33067
USA Tel: 954-899-4040
todd.darling@jibeusa.lighting

© 2019 Jibe Lighting - all rights reserved
Jibe reserves the right to alter material, dimensions and characteristics without prior notice.
Read installation instructions carefully. Technical information on the installation instruction has precedence over the information in the brochure.
Our general terms and conditions shall apply notwithstanding any stipulation to the contrary to all the orders and agreements with Jibe.
You can obtain a copy of these conditions on demand.
For latest information and specifications of the full product range visit **www.jibe.lighting**