FAST AND FURIOUS ARCADE
TWO "MULTI-GAME"
OPERATIONAL DIMENSIONS

******LINK UP TO 8 GAMES***

******LEVEL FLOOR SURFACE DESIRED***

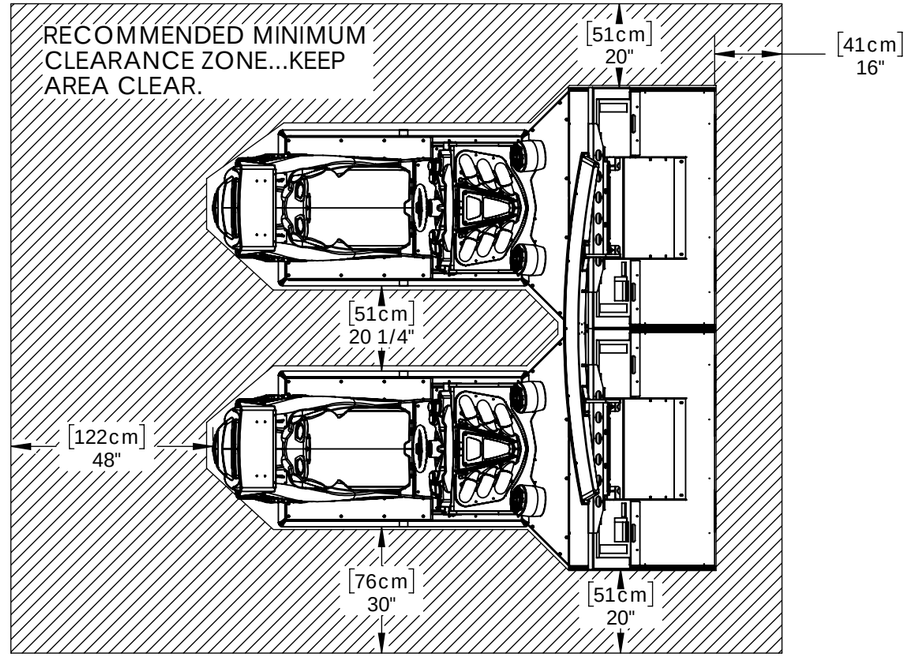

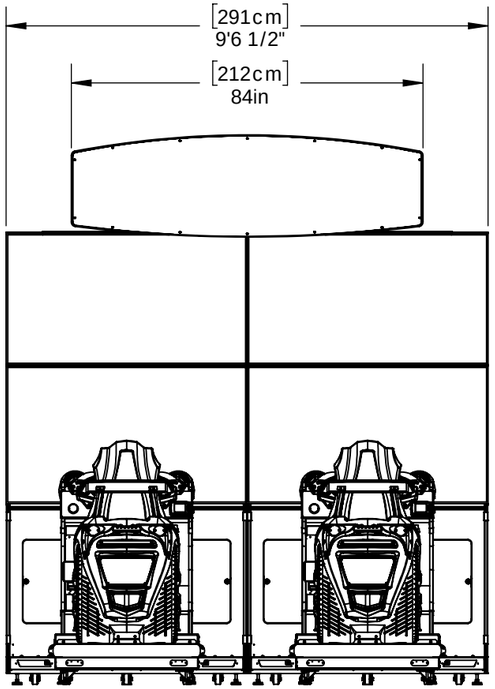

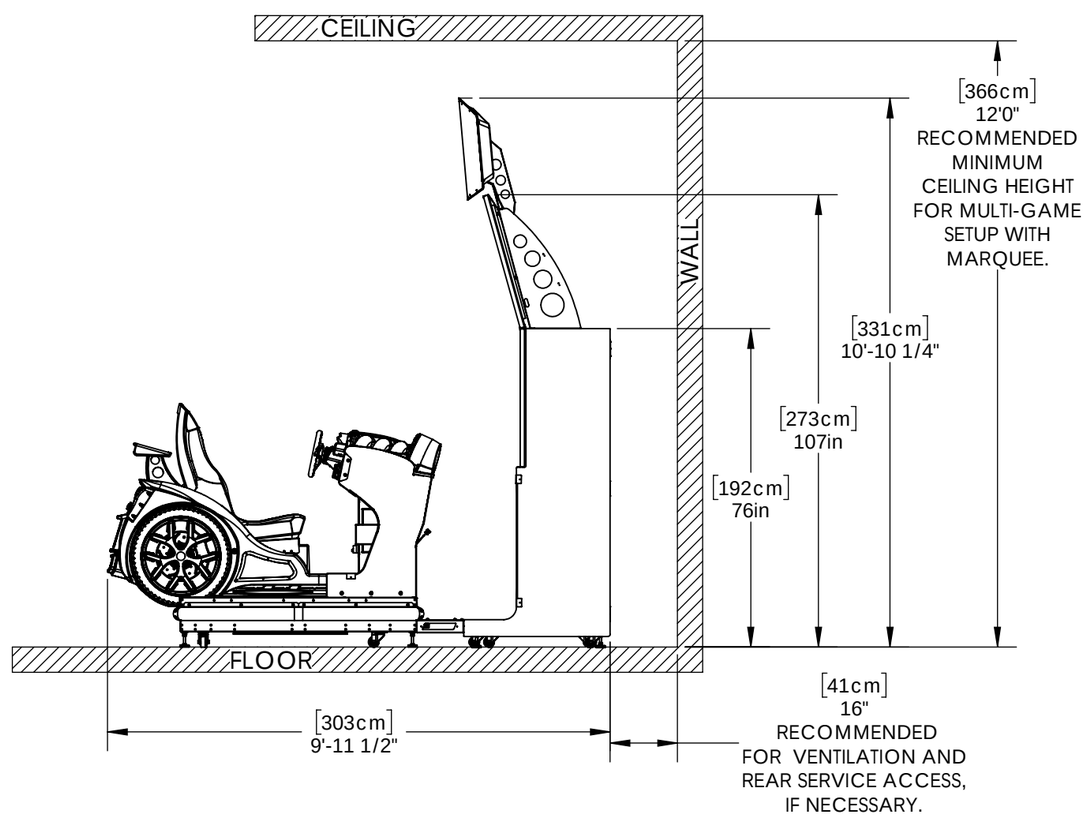
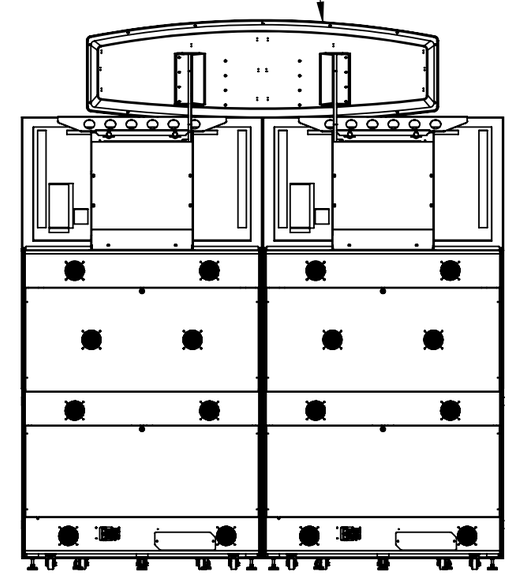
MULTI-GAME MARQUEE STRADDLES BOTH GAMES. REMOVE MARQUEE IF MOVING ONE GAME FOR REAR ACCESS TO CABINET IS REQUIRED FOR SERVICE. SEE MULTI-GAME MARQUEE INSTALLATION DIAGRAM FOR FURTHER DETAILS.