furnlite
BY DEKKO

FC-3580-LED 3 prong plug Black Slim Line LED 8 watt (Warm White) 120V

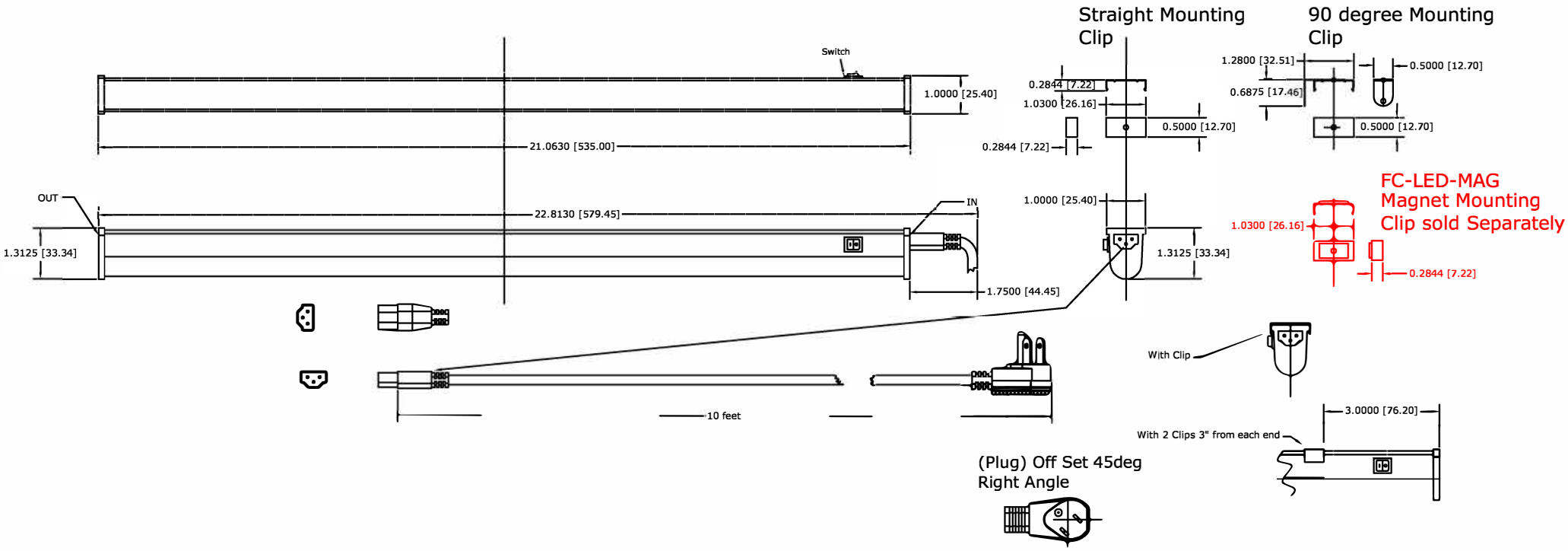

www.furnlite.com | rhelms@furnlite.com | cbailey@furnlite.com | P: 1-704-538-3193 | F: 1-704-538-0386