			REV.NO.	1.0
			CUSTOMER	CORDTEC
ITEM	REVISION	DATE	(CUS)PART NO.	MD10ARC13-072

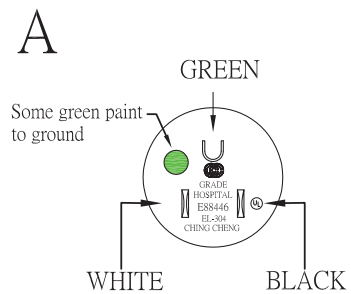

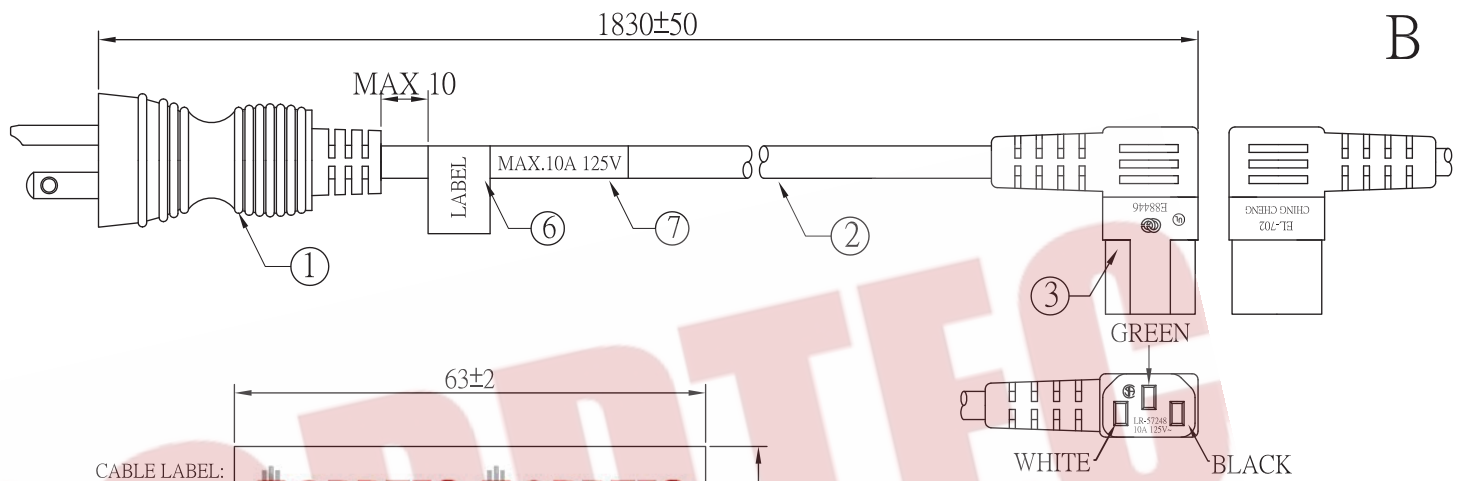

MARK	A	B	MARK	A	B
C					
MS			N		
			NF 1512AP		
			UL	√	√
JET					√
			CCC		
IP44					
CEBEC					
FI					
D			EAC		
KEMA KEUR			CE		

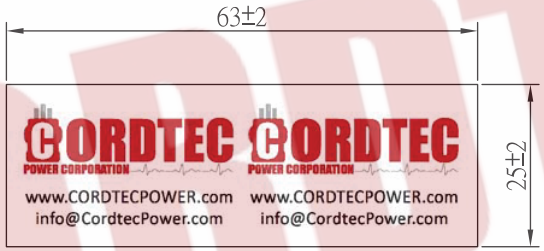

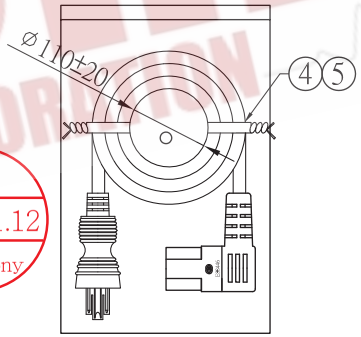

CORDTEC POWER CORPORATION
CONFIRMED

2021.11.12
ChenTony

NOTE:
1.THE CABLE SHALL COMPLY WITH UL 62 .
2.THE MOLDED PLUG SHALL COMPLY WITH NEMA 5-15P.
3.THE MOLDED CONNECTOR SHALL COMPLY WITH IEC/EN 60320/C13.
4.RoHS COMPLIANCE .

NO.	DESCRIPTION	QTY
7	CABLE LABEL 1	1
6	CABLE LABEL	1
5	LABEL BAG:200*280*0.05mm	1
4	MINI TIE	2
3	MOLDED CONNECTOR:EL-702(RIGHT) GREY	1
2	CABLE:SJTW 3X18AWG 75°C GREY	1840mm
1	MOLDED PLUG:EL-304 CLEAR	1

MATERIAL CONSTITUTE TABLE

CORDTEC POWER CORPORATION
Main:1-414-434-2220 Fax:1-414-323-8386
Text:1-414-323-3240
Email: Info@CordtecPower.com

NAME	CORD SET				
CC PART NO.				DRAWING N0.	
UNIT	mm	SCALE	free	DATE	2021.11.12
APPROVED BY		2021.11.12 張小成		DRAWING BY	LFM
				CHECKED BY	