CORDTEC POWER CORPORATION
CONFIRMED
2025.08.24
ChenTony

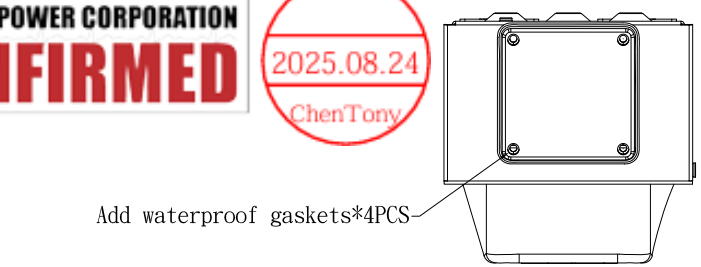

BAFFLE TYPE

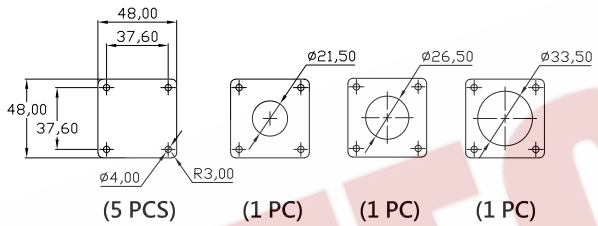

WATERPROOF PAD

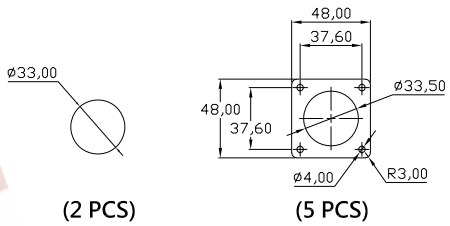

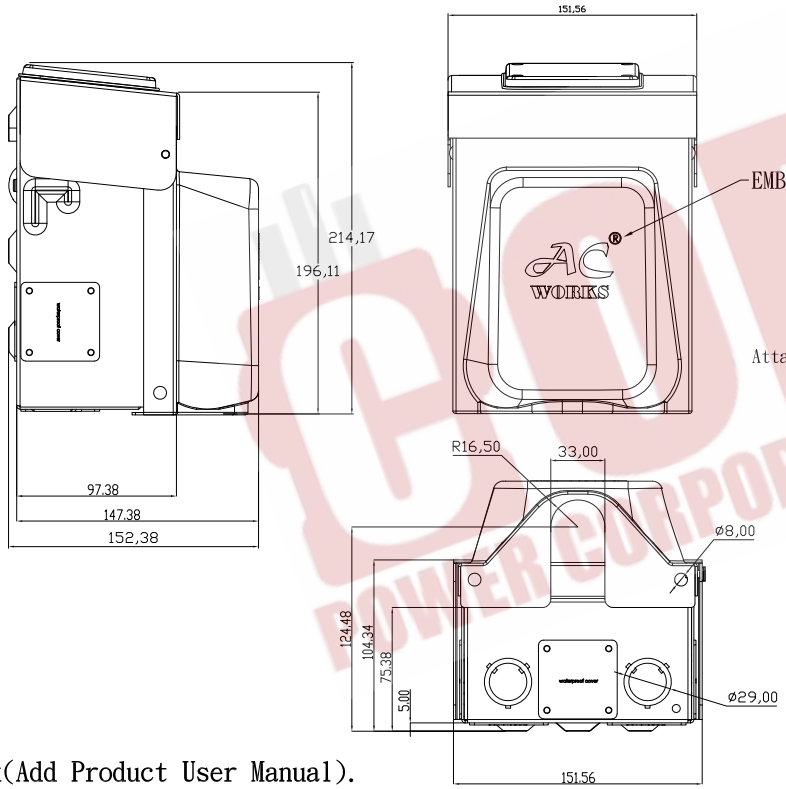

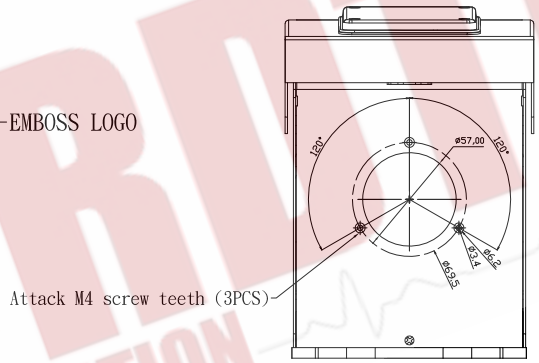

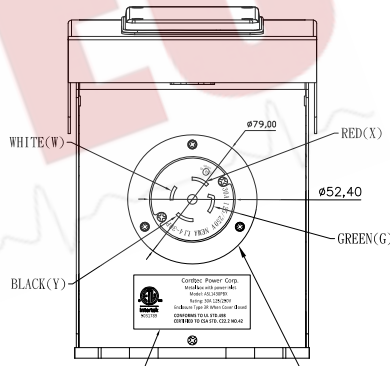

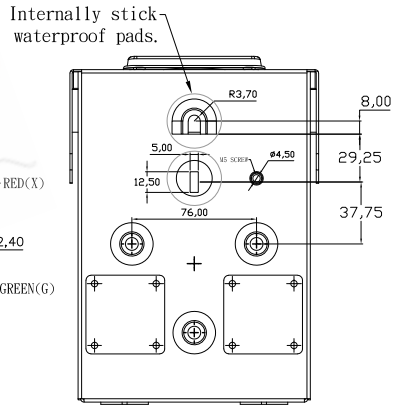

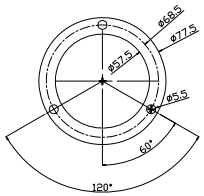

L14-30P
Power Inlet Seal Pad

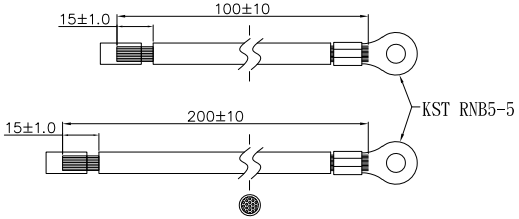

STW 10AWG GREEN (2PCS)

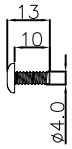

Φ4*13PM Screw(3PCS)

NOTE：

1. 1PC/Box(Add Product User Manual).
2. 6PCS/CTN.
3. Put two cardboards in each carton.
4. Parts package(3 pieces each of ΦM6*35PA screws and waterproof pads)/PC.

CORDTEC POWER CORPORATION

AC Connectors of Cordtec Power Corp
Main:1-414-434-2220 Fax:1-414-323-8386
Text:1-414-323-3240
Email: Info@CordtecPower.com
Website: CordtecPower.com/ ACWORKS.com

UNIT:MM.				ITEM: ASL1430PBX-G		
DWG NO.:1 of 1				CUSTOMER:CORDTEC		
MATERIAL	DATE	SCALE	REV	DRAWN	CHECKED	APPROVED
Iron	2025.08.25		7.0	Alex		