La Marzocco FB-80 & Swift Grinder.

Installation Guidelines

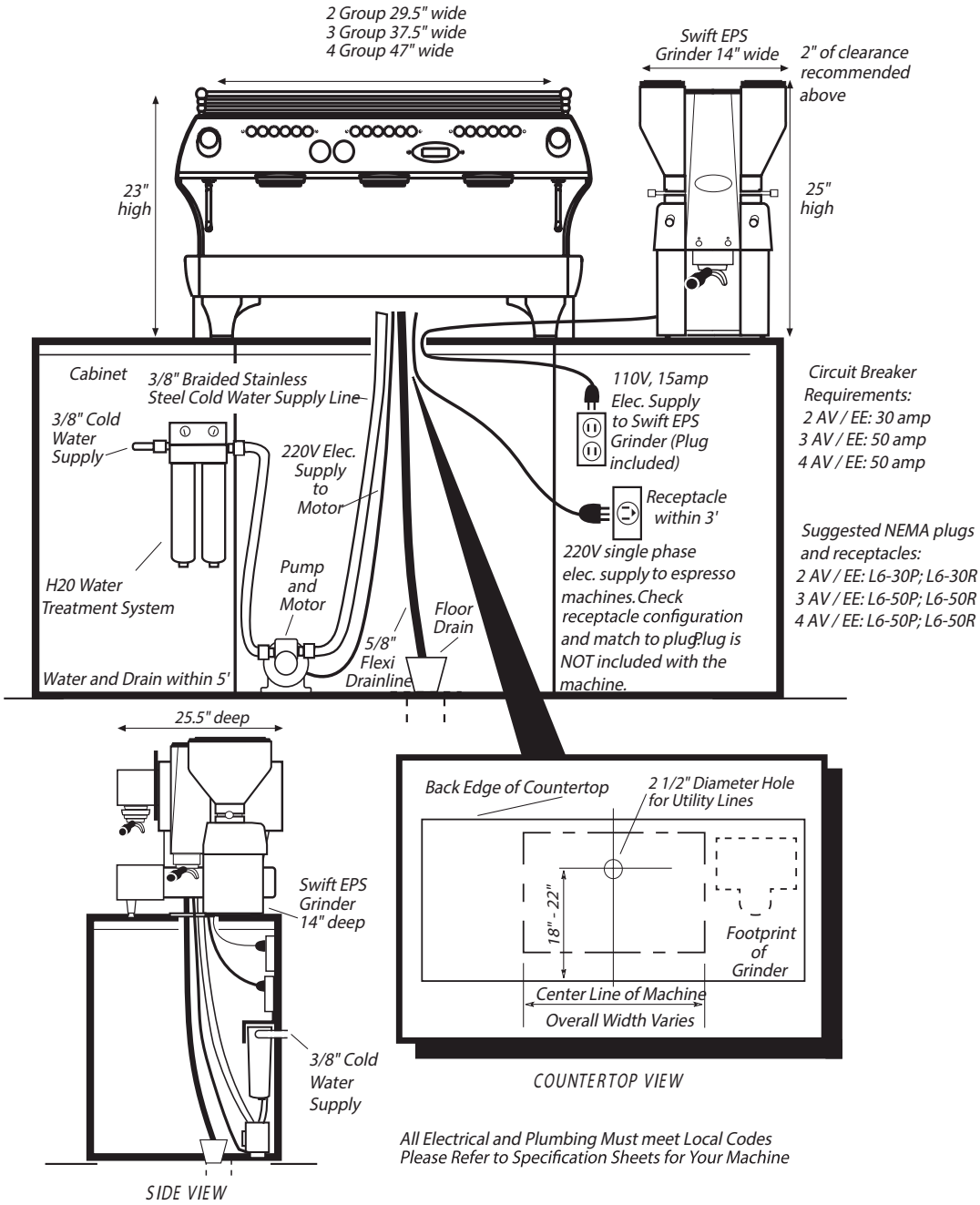

All Electrical and Plumbing Must meet Local Codes
Please Refer to Specification Sheets for Your Machine