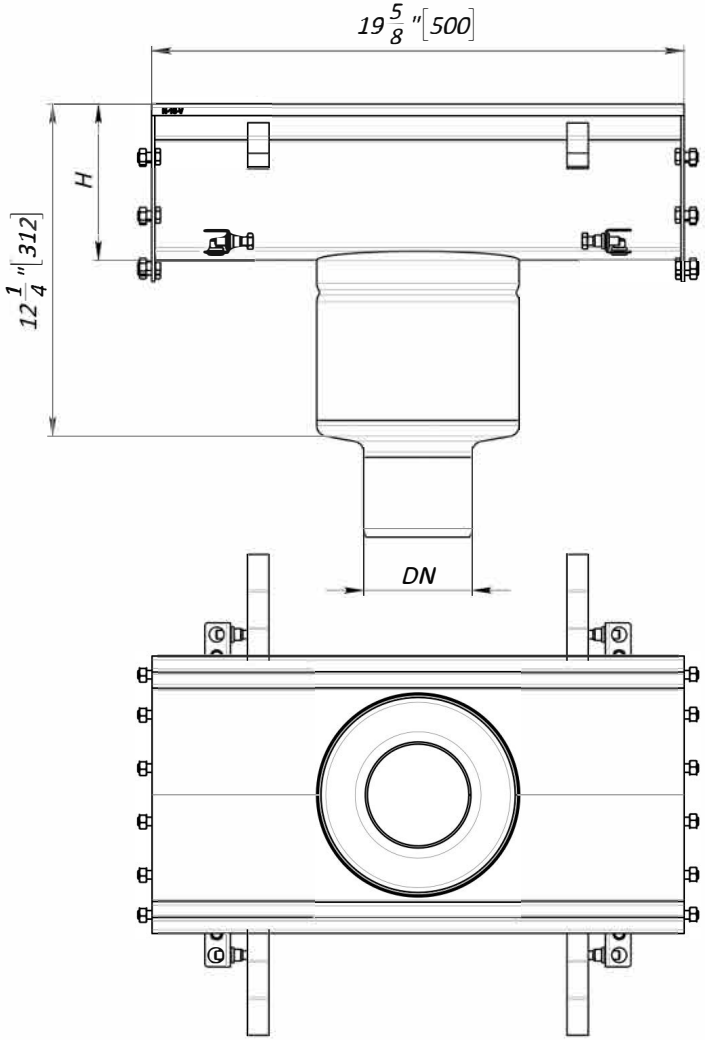

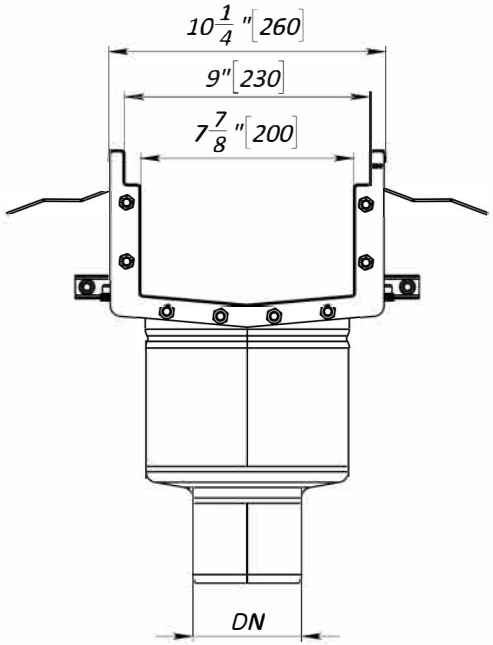

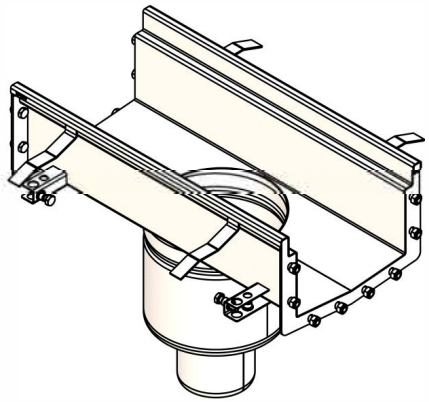

1. *Dimensions for reference, inch [mm]*
2. *Delivery and packaging are carried out in accordance with the terms of the contract*
3. *The manufacturer reserves the right, without notice to the consumer, to make changes to the design of the products for improvement of their technological and operational parameters, which will not affect the quality and properties of the product.*

№	Article #	Description	Mass, kg	Mass, lb	H, mm	H, inch	DN
1	992493	Module system 8'', channel with outlet 4''	5.45	12.0	145	5.7	4" [102]
2	992495	Module system 8'', channel with outlet 6''	5.51	12.1	145	5.7	6" [152]

UNLESS OTHERWISE SPECIFIED:
DIMENSIONS ARE IN MILLIMETERS
SURFACE FINISH:
TOLERANCES:
LINEAR:
ANGULAR:

FINISH:

DEBURRAND BREAK SHARP EDGES

DO NOT SCALE DRAWING

REVISION

VODALAND

	NAME	SIGNATURE	DATE
DRAWN			
CHK'D			
APPV'D			
MFG			
Q.A			

MATERIAL: Stainless Steel (AISI 304)

WEIGHT: lb / kg

TITLE: Module system 8'', channel with outlet

ARTICLE: 8SSPVO

A3

SCALE:1:100

SHEET 1 OF 1