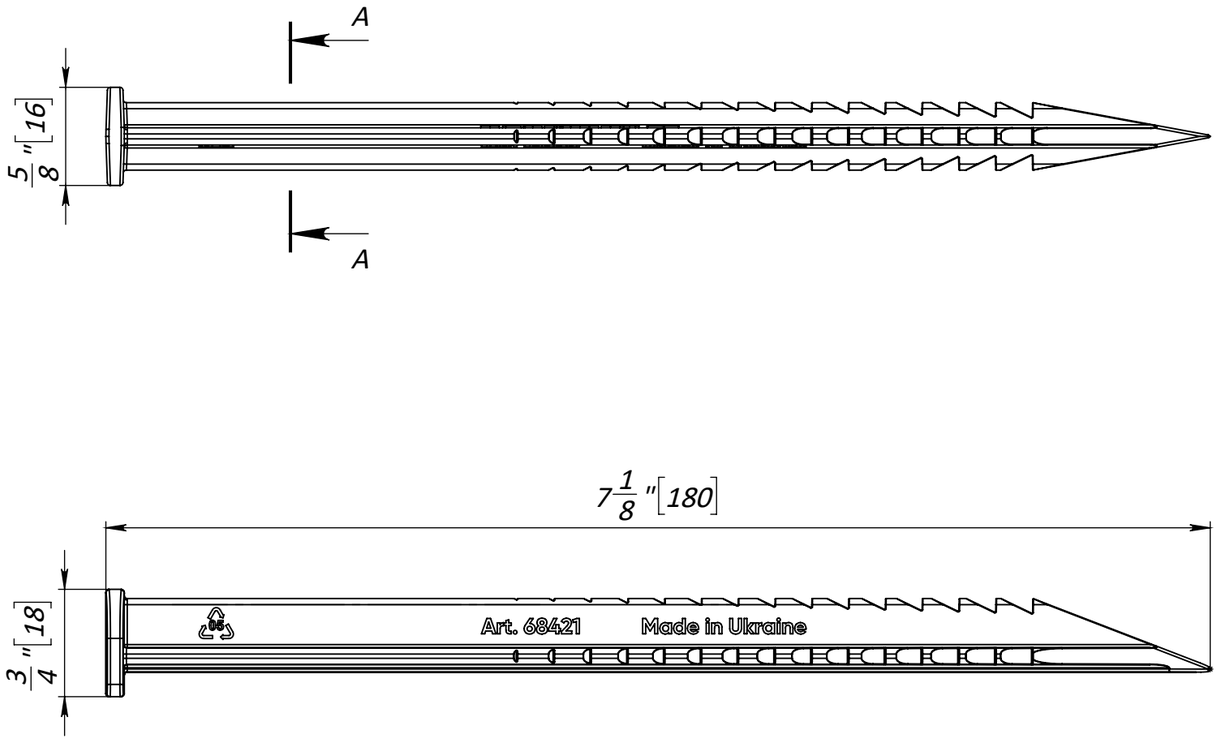

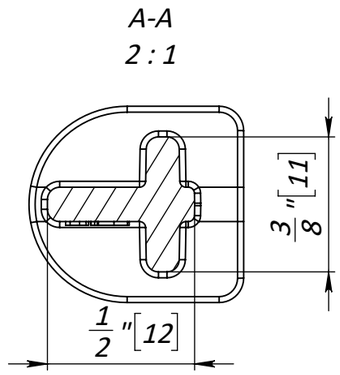

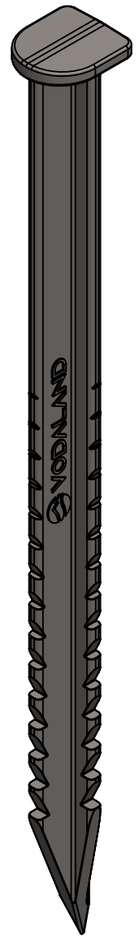

1. Deviation of the actual weight of the nominal can be up to 8%
2. Dimensions for reference inch, [mm]

UNLESS OTHERWISE SPECIFIED: DIMENSIONS ARE IN MILLIMETERS SURFACE FINISH: TOLERANCES: ISO 2768-c LINEAR: ANGULAR:	FINISH:				DO NOT SCALE DRAWING	REVISION
	NAME	SIGNATURE	DATE		VODALAND	
DRAWN	PMV		10.01.23		TITLE: Plastic anchor universal H7.08''	
CHK'D	PMK					
APPV'D						
MFG						
Q.A				MATERIAL: Plastic	ARTICLE: 68421	A3
				WEIGHT: 0.018 lb /8.38 g	SCALE:1:1	SHEET 1 OF 1