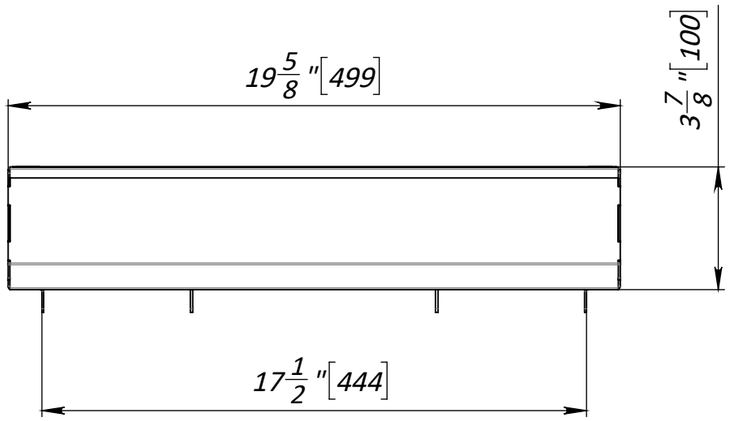

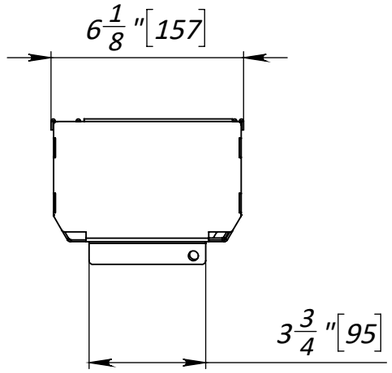

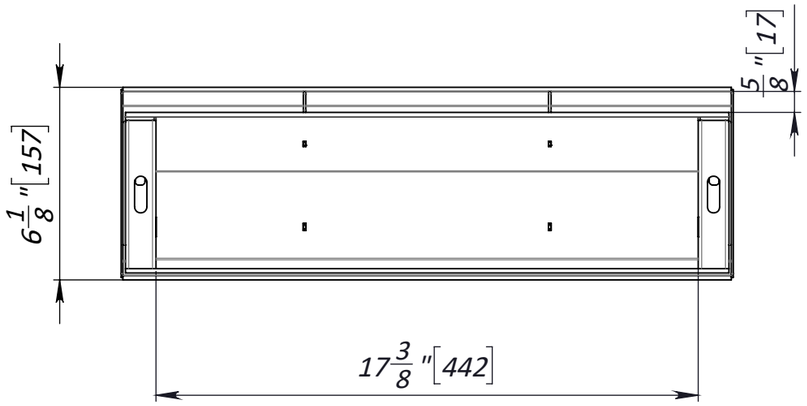

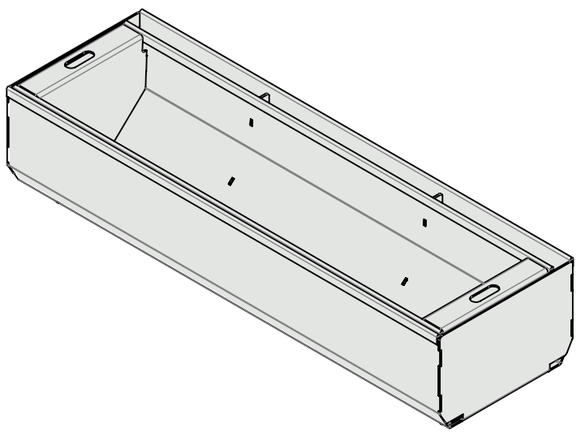

1. Dimensions for reference inch [mm].
2. Hot dip galvanised according to ISO 1461:2009.
3. Delivery and packaging are carried out in accordance with the terms of the contract
4. The manufacturer reserves the right, without notice to the consumer, to make changes to the design of the products for improvement of their technological and operational parameters, which will not affect the quality and properties of the product.
5. Load class can be achieved according to intallation scheme.

UNLESS OTHERWISE SPECIFIED: DIMENSIONS ARE IN MILLIMETERS SURFACE FINISH: TOLERANCES: ISO 2768-m LINEAR: ANGULAR:	FINISH: Hot dip galvanized		DEBURR AND BREAK SHARP EDGES	DO NOT SCALE DRAWING	REVISION V.2
				VODALAND	
	NAME	SIGNATURE	DATE	TITLE: 4" Base Channel Galvanized Steel Slot Drain Revision L-type H4" A15-C250 Load class A15-C250	
DRAWN	Markovych		17.08.22		
CHK'D					
APPV'D					
MFG					
Q.A				MATERIAL: Galvanized Steel	ARTICLE: 20175-1L-100	A3
				WEIGHT: 9.1 lb /4.12kg	SCALE:1:5	SHEET 1 OF 1