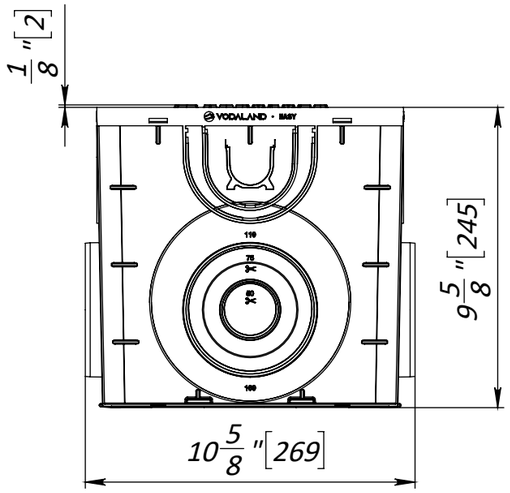

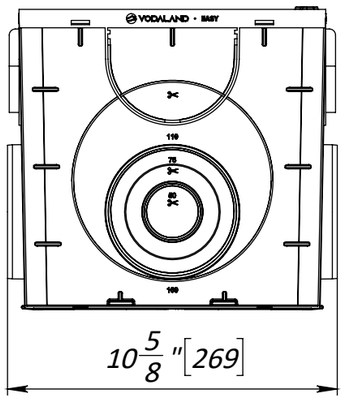

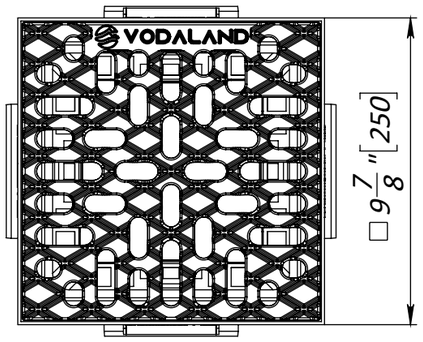

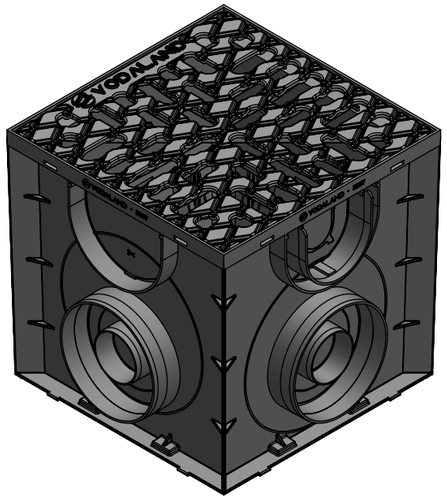

1. Deviation of the actual weight of the nominal can be up to 10%
2. Dimensions for reference inch, [mm]

UNLESS OTHERWISE SPECIFIED:
DIMENSIONS ARE IN MILLIMETERS
SURFACE FINISH:
TOLERANCES: ISO 2768-c
LINEAR:
ANGULAR:

FINISH:

DO NOT SCALE DRAWING

REVISION

VODALAND

	NAME	SIGNATURE	DATE
DRAWN	LYY		04.11.22
CHK'D	LMK		
APPV'D			
MFG			
Q.A			

MATERIAL:

WEIGHT: 6.50 lb / 2.95 kg

TITLE:

10''x10'' Easy catch basin with cast iron slotted grate

ARTICLE:

0867031

A3

SCALE:1:5

SHEET 1 OF 1