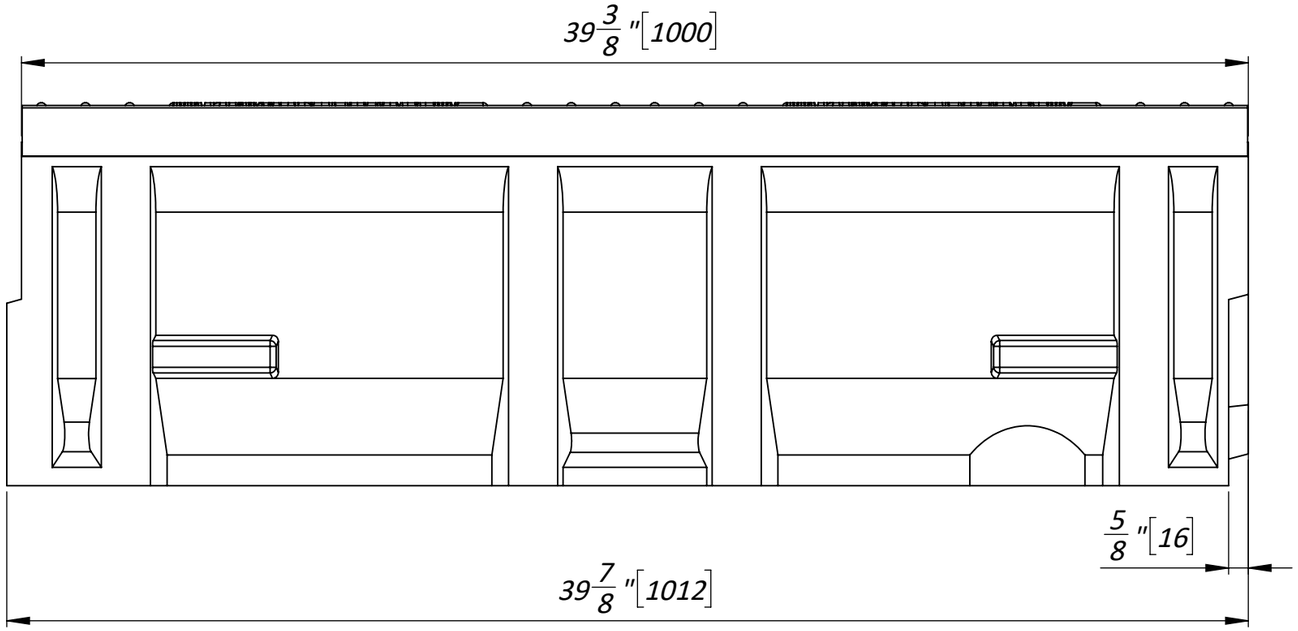

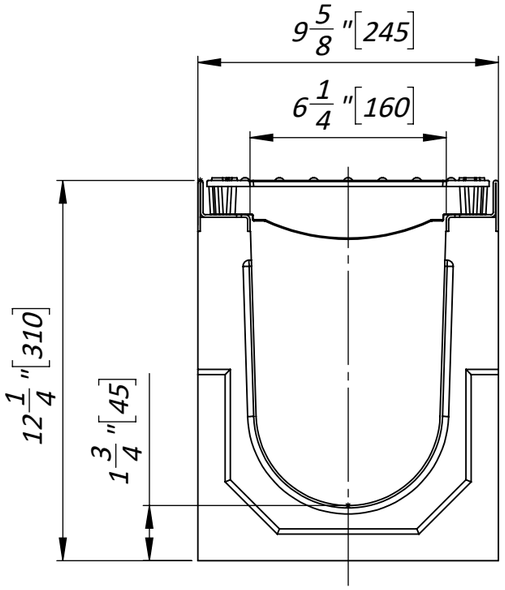

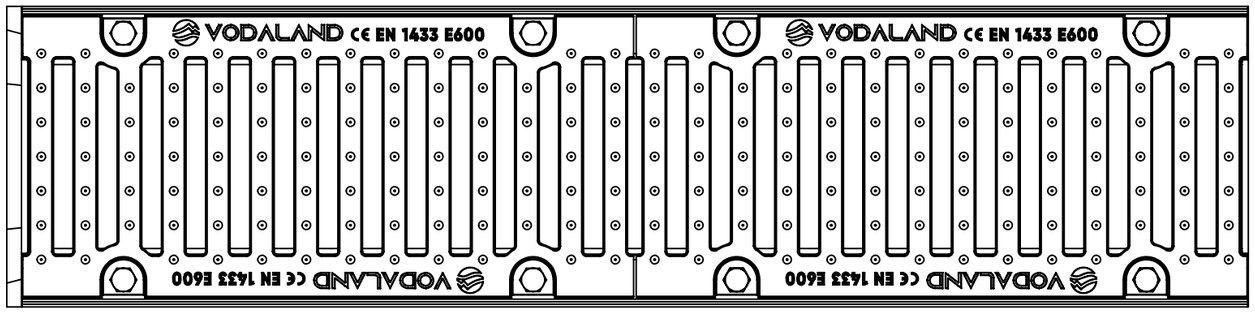

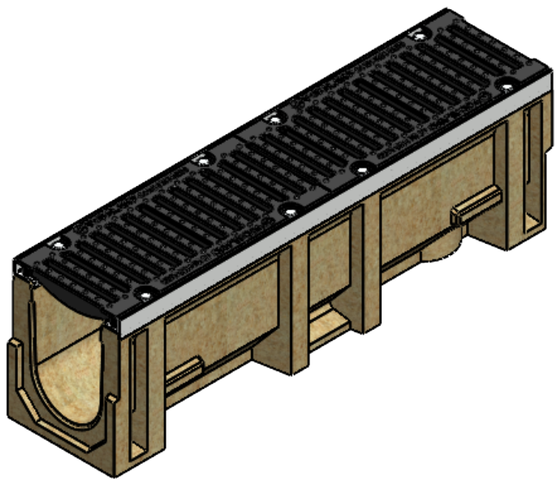

1. *Dimensions for reference, inch [mm]*
2. *Area of water intake slots 120.9 sq in [780 sq cm]*
3. *Delivery and packaging are carried out in accordance with the terms of the contract*
4. *The manufacturer reserves the right, without notice to the consumer, to make changes to the design of the products for improvement of their technological and operational parameters, which will not affect the quality and properties of the product*
5. *Deviation of the actual weight of the nominal can be up to 10%.*

UNLESS OTHERWISE SPECIFIED:
DIMENSIONS ARE IN MILLIMETERS
SURFACE FINISH:
TOLERANCES: ISO 2768 - C
LINEAR:
ANGULAR:

FINISH:

DEBURR AND BREAK SHARP EDGES

DO NOT SCALE DRAWING

REVISION

VODALAND

	NAME	SIGNATURE	DATE
DRAWN	Kozak		27.02.23
CHK'D	Kyselytsia		
APPV'D	Malynovskiy		
MFG			
Q.A			

TITLE:
6.5'' [DN160] Polymer Concrete Drain Channel Mega H12.2'' [H310] with Cast Iron Grate E600

MATERIAL:
Polymer Concrete, Ductile Cast Iron

WEIGHT: 153,8 lb / 69.9 kg

ARTICLE:
07300/310

A3

SCALE:1:5

SHEET 1 OF 1