PROGRESSION

Fitness™

5001R

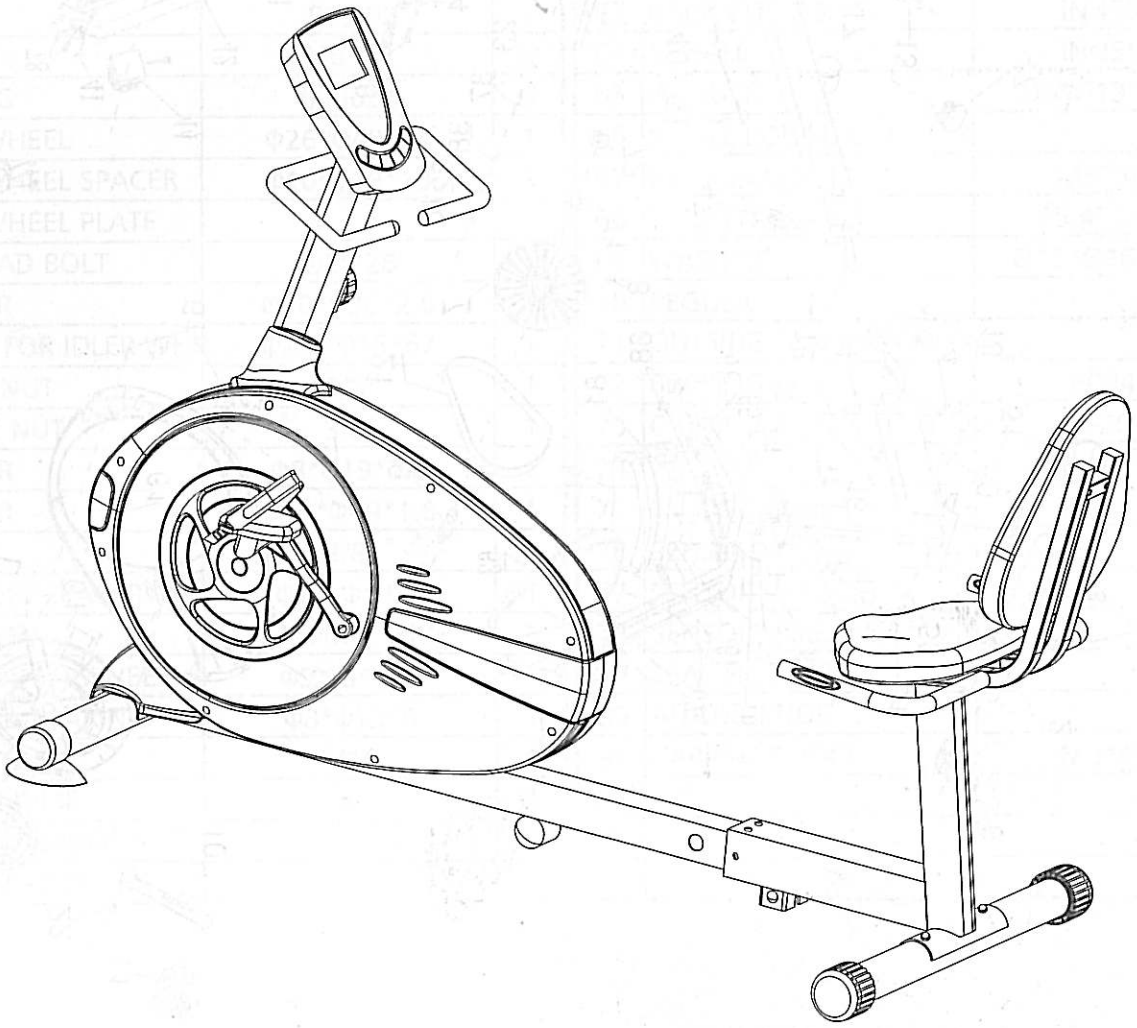

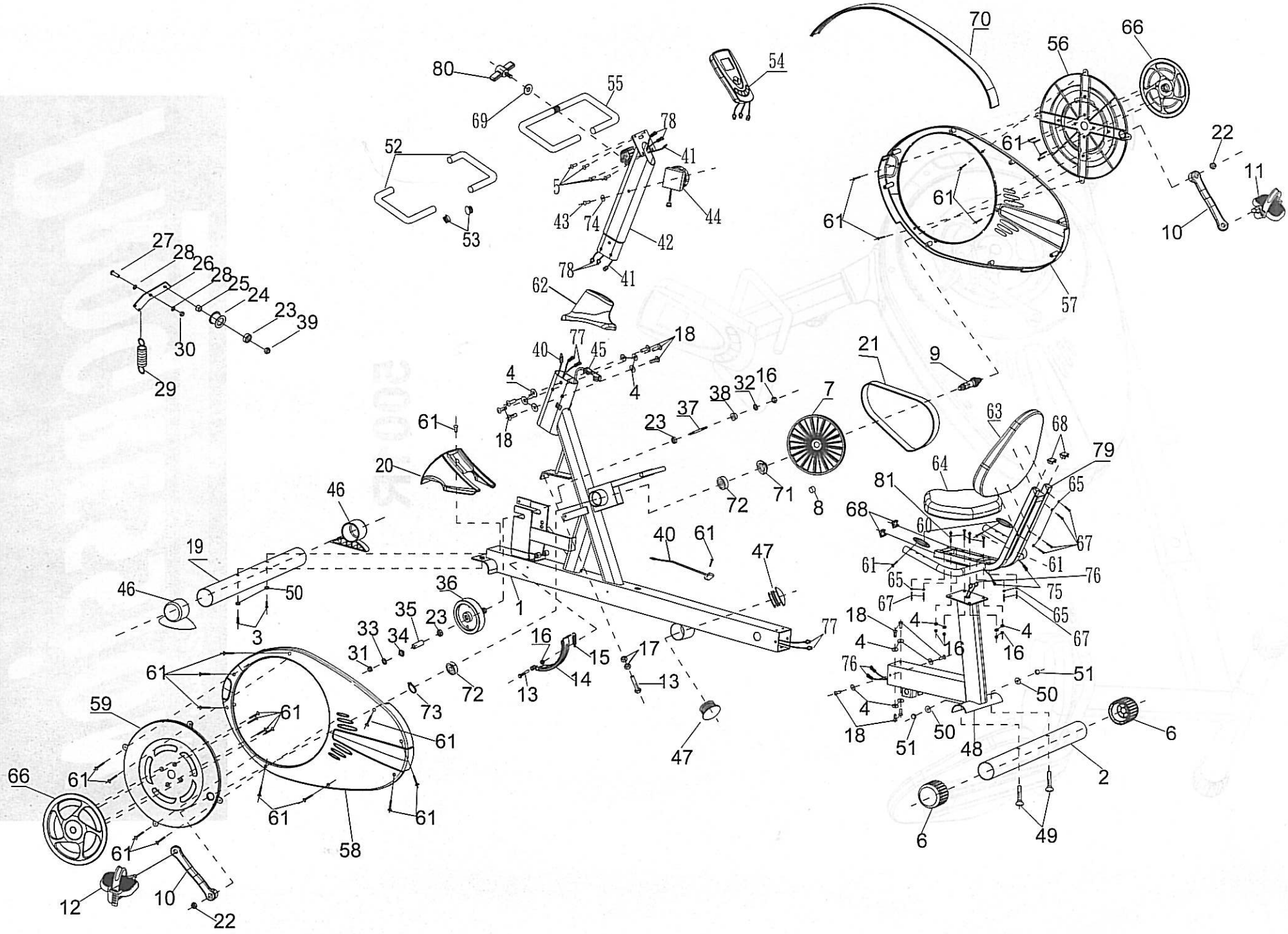

70
66
56
54
80
55
69
78
41
52
5
44
43
74
42
53
61
22
11
10
57
27
28
26
28
25
24
23
39
30
29
62
77
40
45
18
4
21
9
7
38
32
16
37
23
63
68
79
64
81
65
20
46
72
71
8
60
67
19
40
61
47
76
75
50
36
1
3
35
33
34
31
16
15
17
14
13
73
59
58
51
48
6
2
49
12
10
22

5001R Parts List

NO.	PARTS	SPECS	QTY
1	MAIN FRAME		1
2	REAR STABILIZER	Ø60*1.8*600	1
3	HEX HEAD NUT	M8*65MM	2
4	WASHER	Φ8*Φ19*1.5	16
5	SCREW	M4*16	4
6	WHEEL CAP	Ø60	2
7	PULLEY	315MM	1
8	MAGNET	Φ12.5	1
9	PEDAL AXLE	Φ20*210	1
10	CRANK	3PCS 9/16"	2
11	PEDAL RIGHT	CS-50B 9/16"	1
12	PEDAL LEFT	CS-50B 9/16"	1
13	HEX HEAD NUT	M8*60	2
14	ARC PLATE	Ø230MM	1
15	SPRING FOR ARC PLATE	Φ1.5*Φ14.5*64	1
16	NYLON NUT	M8	6
17	NUT	M8	2
18	CAP BOLT	M8*15	12
19	FRONT STABILIZER	Ø60*1.8*500	1
20	FRONT STABILIZER CAP		1
21	BELT	J8 490	1
22	NUT	M8*20	2
23	BEARING	6000ZZ	3
24	IDLER WHEEL	Φ26*Φ40*24	1
25	IDLER WHEEL SPACER	Φ10*Φ13*10	1
26	IDLER WHEEL PLATE		1
27	HEX HEAD BOLT	3/8"*26	1
28	WASHER	Φ10*Φ26*2.0	2
29	SPRING FOR IDLER WHE	Φ2.6*Φ15*57	1
30	NYLON NUT	3/8"	1
31	FLANGE NUT	3/8"	1
32	WASHER	Φ8*Φ19*2.0	1
33	WASHER	Φ10*Φ19*1.5	1
34	BC NUT	3/8"	1
35	FLYWHEEL SPACER	Φ10*Φ13*4	1
36	FLYWHEEL	Φ230MM 8KG	1
37	AXLE FOR FLYWHEEL	Φ9.98*126	1
38	GREASED BEARING	Φ8*Φ13*6	1
39	NYLON NUT	M10	1
40	SENSOR WIRE		1
41	EXTENSION WIRE		1
42	UPRIGHT POST		1

NO.	PARTS	SPECS	QTY
43	SCREW FOR TENSION KN	M4*45	1
44	TENSION KNOB		1
45	TENSION CABLE		1
46	FRONT STABILIZER END	Ø50.8	2
47	END CAP		2
48	SLIDE TUBE		1
49	CARRIAGE BOLT		2
50	ARC WASHER	Ø8*19*1.5	4
51	CAP NUT	M8	2
52	HANDLEBAR FOAM		2
53	HANDLEBAR CAP		2
54	MONITOR	B11002	1
55	HANDLEBAR		1
56	ROUND CAP RIGHT		1
57	COVER RIGHT		1
58	COVER LEFT		1
59	ROUND CAP LEFT		1
60	HAND PULSE PLATE	PE-18	2
61	SCREW	M4*16	28
62	UPRIGHT POST COVER		1
63	BACK CUSHION	INN55	1
64	SADDLE	INN55	1
65	WASHER	Ø6*Ø13*1.0	8
66	SMALL ROUND CAP		2
67	HEX HEAD BOLT	M6*40	8
68	TUBE END CAP	25.4*25.4	4
69	WASHER	Ø13*Ø26*1.5	1
70	REGULA		1
71	OUTSIDE BEARING COLLAR		1
72	BEARING	6004	2
73	C-CLIP	S-20	1
74	WASHER	Ø5*Ø20*1.5	1
75	SENSOR WIRE-1		2
76	SENSOR WIRE-2		2
77	SENSOR WIRE-3		2
78	SENSOR WIRE-4		2
79	SEAT FRAME		1
80	ADJUST KNOB		1
81	CARRIAGE BOLT	M8*40	4
82			
83			

ASSEMBLY PART LIST

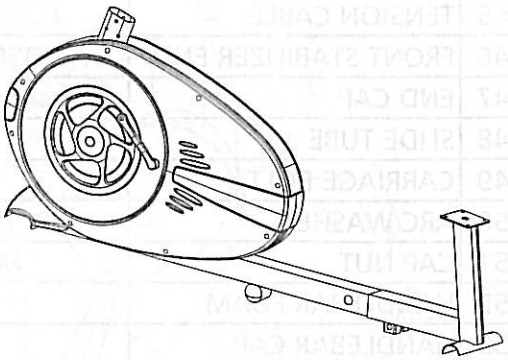 MAIN FRAME(1)		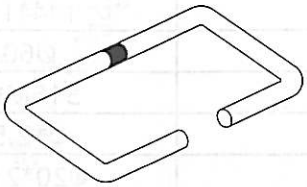 HANDLEBAR (55)	
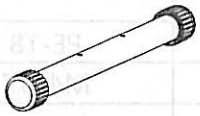 REAR STABILIZER (2)	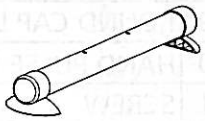 FRONT STABILIZER (19)	UPRIGHT TUBE(42)	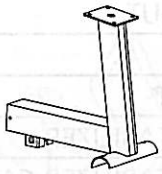 SEAT POST (48)
UPRIGHT TUBE JACKET(62)	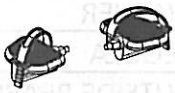 PEDAL(L,R) (11&12)	SEAT (64)	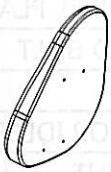 plasic bellows(63)
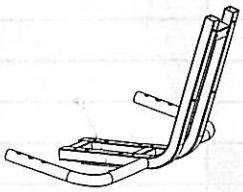 SEAT FRAME (79)	TENSION CONTROLLER(44)	COMPUTER (54)	

ASSEMBLY ACCESSORY

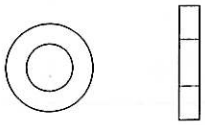 Ø 6xØ 13 Washer(65)-8	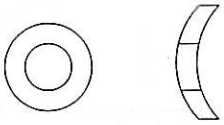 Ø 8xØ 19 Arc Washer(50)-4	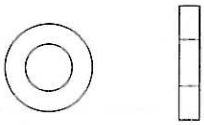 Ø 8xØ 19 Washer(4)-16
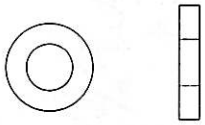 Ø 13xØ 26 Washer(69)-1	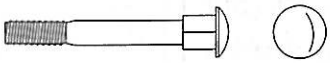 M8X40mm Carriage Bolt(81)-4	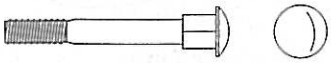 M8X70mm Carriage Bolt(49)-2
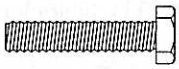 M6*40mm Screw (67)-8	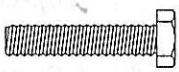 M8x65mm Screw (3)-2	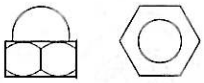 M8 Cap nut(51)-2
M8 Nylon Locknut(16)-4	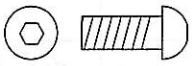 M8x15mm Screw (18)-12	locking knob(80)-1
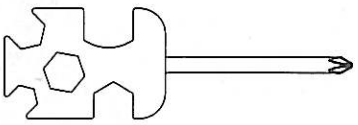 Screw Driver		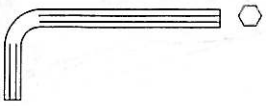 ALLen Wrench

INSTRUCTIONS FOR ASSEMBLY:

UNPACK THE CARTON AND CHECK FROM THE PARTS, THAT ALL COMPONENTS ARE PRESENTED. DON'T DISPLAY.

DON'T DISPOSE THE PACKING MATERIAL UNTIL ASSEMBLY HAS BEEN COMPLETED.(ALLEN WRENCH ARE INCLUDED WHICH CAN BE USED FOR ASSEMBLY)

1 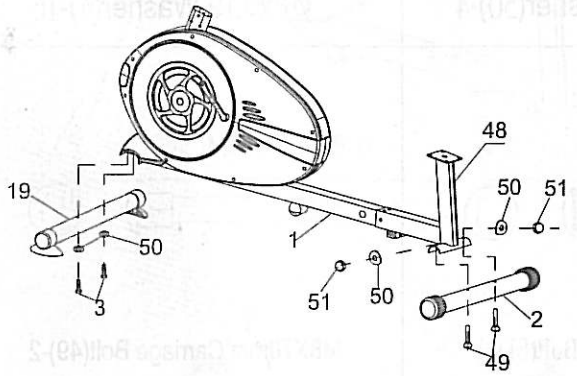 	Step 1. 1.Attach the rear stabilizer (2) onto the rear frame(48) with carriagebolts (49)、washers (50) and cap nuts(51). 2.Attach the front stabilizer (19) onto the frame(1) with tight bolt (3) and washers (50) .
2 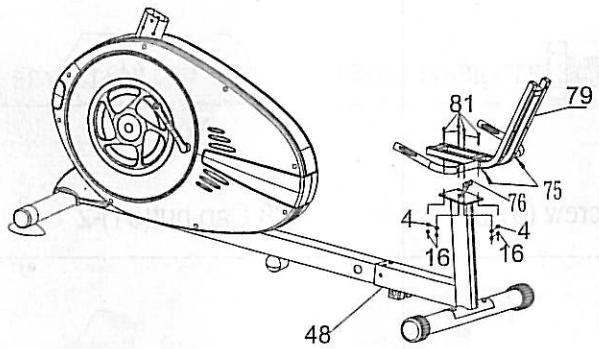 	Step 2. connect the pulse wire (75)to the pulse wires (76).Attach the seat frame (79) onto the rear frame(48) with carriage bolts (81), Nylock nuts (16), and washers (4).
3 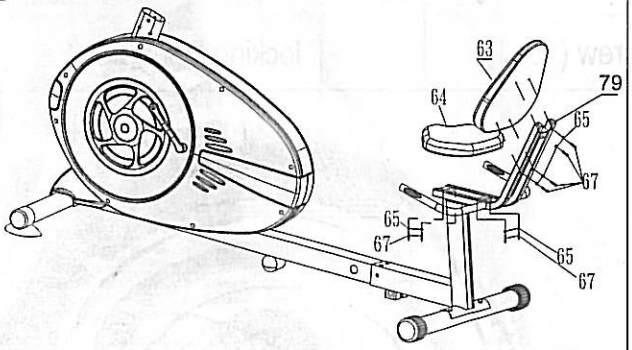 	Step 3. Attach the seat (64) onto the seat frame (79) with bolts (67) and washers (65). Attach the back cushion (63) onto the seat frame (79) with bolts (67) and washers (65).

<table>
<tr>
<td>4
 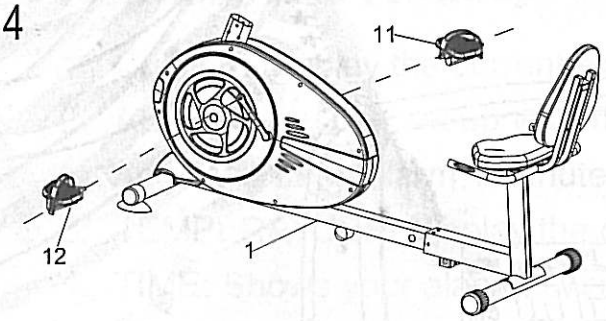
</td>
<td>Step 4.
insert the pedals(11&12)to the crank.("L"for the left and "R"for the right).</td>
</tr>
<tr>
<td>5
 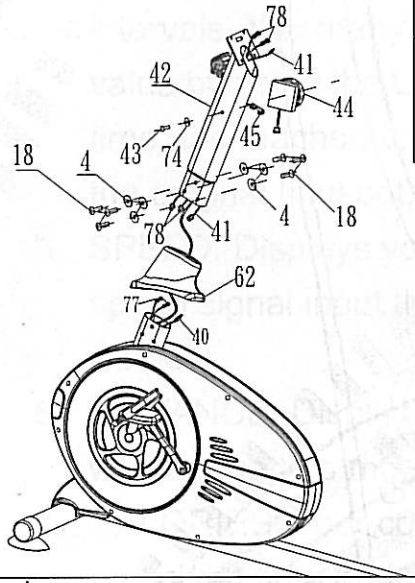

 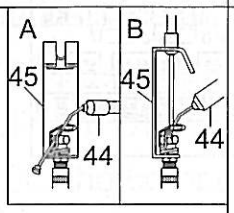
</td>
<td>Step 5.
1.Connect the sensor wire(40) and the extension wire(41).pulse wire(77)to the pulse wire (78).Connect the tension wire(45) and the extension tension wire(44) as follow:
Step 1: Put the cable end(44) into the spring hook(45).
Step 2: Pull the knob and force the short cable(44) into the gap of the bracket(45).
Step3.: Insert the tension knob(45) into the upright tube(42), fix it with screw(43) and waser (74).
2.attach the upright tube(42)onto the main frame(1).with screw(18) and washers(4).</td>
</tr>
<tr>
<td>6
 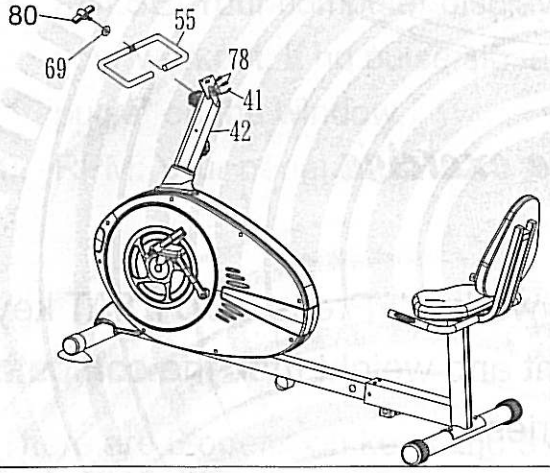
</td>
<td>steup 6.
Attach the handlebar (55) to the upright post (42) and fix it with the locking knob(80) and knob cover(69).</td>
</tr>
<tr>
<td>7
 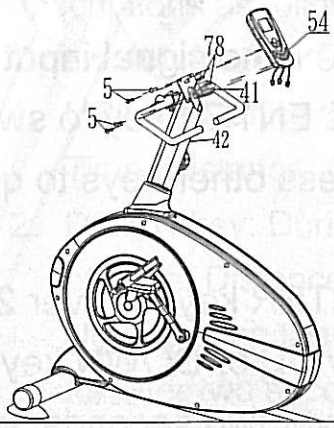

 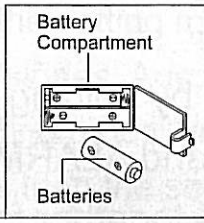
</td>
<td>steup 7.
Connect the male end of the extension wire(41) and the pulse cables(78) to the computer(54) .
Insert the computer(54) onto the upright tube(42) and tight bolt (5).</td>
</tr>
</table>

Display Console Overview:

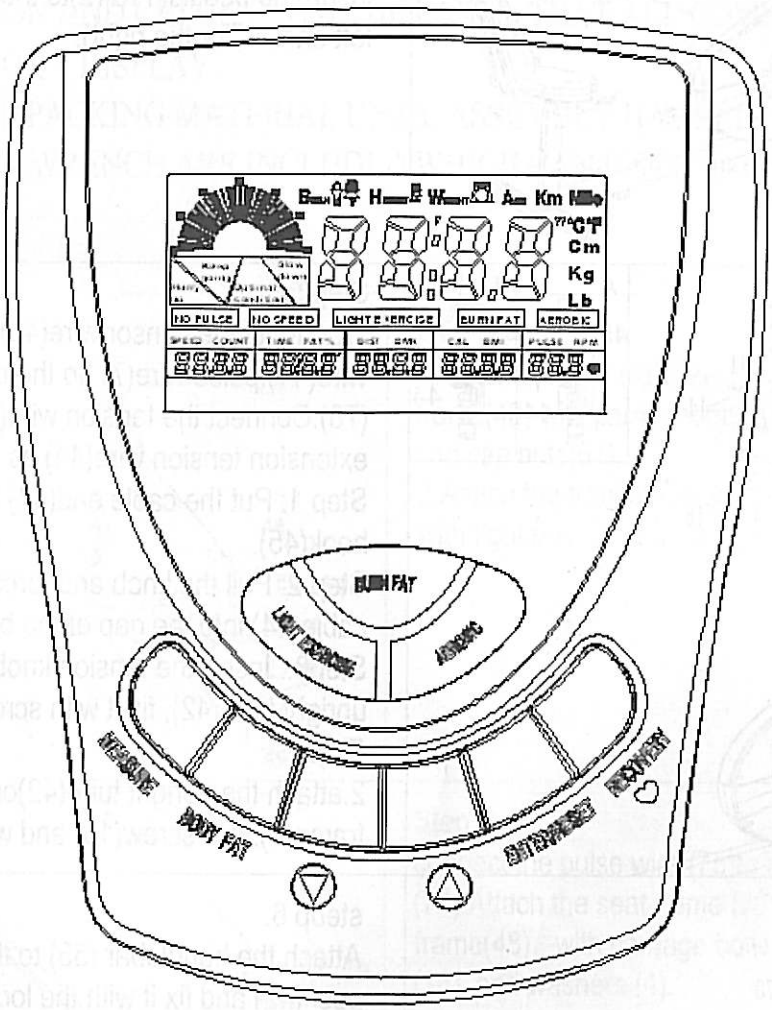

The things you should know before exercise

A. User Data:

You should input your personal data before workout. Press BODY FAT key to enter your personal data of sexy, age, height and weight then the computer can save the data unless take out the batteries.

B. Clock Mode:

a. The computer will enter the clock mode when there is no signal input or no keys be pressed after 4 minutes. You can press ENTER key to switch the clock and temperature at the clock mode or press other keys to quit the clock mode.

b. You can set up the TIME or ALARM by holding ENTER key for over 2 seconds then you can set up TIME and ALARM by UP or DOWN keys.

c. By holding the ENTER and UP keys together for over two seconds, you can check the current clock at "NO SPEED" mode.

Functions and Features:

1. CLOCK: Display the current clock in hour and minute and second.
2. ALARM: You can set up your morning call or setting time by this computer and it will beep alarm 1 minute when your setting time is reached.
3. TEMPERATURE: Display the current temperature.
4. TIME: Shows your elapsed workout time in minutes and seconds. Your computer will automatically count up from 0:00 to 99:59 in one second intervals. You many also program your computer to count down from a set value by using the UP and DOWN keys. If you continue exercising once the time has reached 0:00, the computer will begin beeping, and reset itself to the original time set, letting you know your workout is done.
5. SPEED: Displays your workout speed value in KM/MILE per hour. If no speed signal input then the computer will display "NO SPEED" on the window.
6. DISTANCE: Displays the accumulative distance traveled during each workout up to a maximum of 99.9KM/MILE.
7. CALORIES: Your computer will estimate the cumulative calories burned at any given time during your workout.
8. PULSE: Your computer displays your pulse rate in beats per minute during your workout. If no pulse signal input then the computer will display "NO pulse" on the window.
9. RPM: Your pedal cadence.

Key functions:

There are 6 operation keys and 3 exercise guide keys and the function descriptions as follows:

Operation keys:

1. UP key: During the setting mode, press the key to increase the value of Time, Distance, Calories, Age, Weight, Height etc. and to select sexy.
2. DOWN key: During the setting mode, press the key to decrease the value of Time, Distance, Calories, Age, Weight, Height etc. and to select sexy.
   Note: During the setting mode, you can hold UP and DOWN keys together for over two seconds then the setting value will reset to Zero or default value.
3. ENTER/RESET key: a. Press the key to accept the current data entry

b. By holding this key for over two seconds the user can reset all values to zero or default value.

4. BODY FAT key: Press the key to enter your personal data before measure your body fat ratio.
5. MEASURE key: Press the key to get your body fat ratio and BMI and BMR.
   a. FAT %: Indicate your body fat percentage after measurement.
   b. BMI (Body Mass Index): BMI is a measure of body fat based on height and weight that applies to both adult men and women.
   c. BMR (Basal Metabolic Rate): Your Basal Metabolic Rate (BMR) shows the number of calories your body needs to operate. This doesn't account for any activity, it's simply the energy needed to sustain a heartbeat, breathing and normal body temperature. It measures the body at rest, not sleep, at room temperature.
6. PULSE RECOVERY key: Press the key to activate heart rate recovery function.

F=1.0 means OUSTANDING
1.0＜F＜2.0 means EXCELLENT
2.0≦F≦2.9 means GOOD
3.0≦F≦3.9 means FAIR
4.0≦F≦5.9 means BELOW AVERAGE
F=6.0 means POOR

Exercise Guide keys:

1. LIGHT EXERCISE: During the exercise mode, press the key to enter the exercise guide of LIGHT EXERCISE. The computer will indicate the best working way for you according to your RPM and Heart rate. LIGHT EXERCISE game is a smooth and steady exercise for users. The best working way is the "Optimal condition".
2. BURN FAT: During the exercise mode, press the key to enter the exercise guide of BURN FAT. The computer will indicate the best working way for you according to your RPM and Heart rate. BURN FAT game is a high level exercise for users. The best working way is the "Optimal condition".
3. AEROBIC: During the exercise mode, press the key to enter the exercise guide of AEROBIC. The computer will indicate the best working way for you according to your RPM and Heart rate. AEROBIC game is a overload exercise for users. The best working way is the "Optimal condition".

Instruction ways for exercise guide mode:

Slow down: At the race mode of LIGHT EXERCISE, BURN FAT and

AEROBIC when the computer displays “Slow down” on the window. It means you should slow down the exercise or stop the exercise for a while.

Optimal condition: At the race mode of LIGHT EXERCISE, BURN FAT and AEROBIC when the computer displays “Optimal condition” on the window. It means you got a good job during workout.

Keep going: At the race mode (LIGHT EXERCISE, BURN FAT and AEROBIC) when the computer displays “Keep going” on the window. It means your exercise should be kept going.

Hurry up: At the race mode (LIGHT EXERCISE, BURN FAT and AEROBIC) when the computer displays ”Hurry up” on the window. It means you should increase your speed immediately.

Error Message:

E: The speed over than 999.9 MPH/KPH then the computer will display “E”.
Err: When measure the body fat function or pulse recovery function, if there is no pulse signal input within 20 seconds then the computer will display “Err”. You can repress any keys to quit the Err message.

How to replace the batteries:

Please move out the battery cover from the bottom housing then replacement the batteries. The instruction as below,

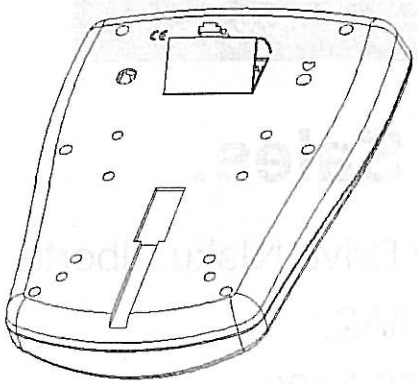

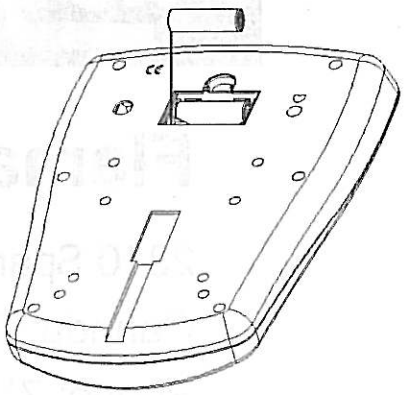

Flaman Sales.

2310 Sparrow Drive.NIsku Alberta,

Canada. T9E 8A2.

Phone: 780 955 3400

Fax: 780 955 3879

©2006 Progression Copyright