LookOurWay
PROMOTIONAL ADVERTISING EXPERTS

4' X 3'
Custom Barricade Cover

FRONT

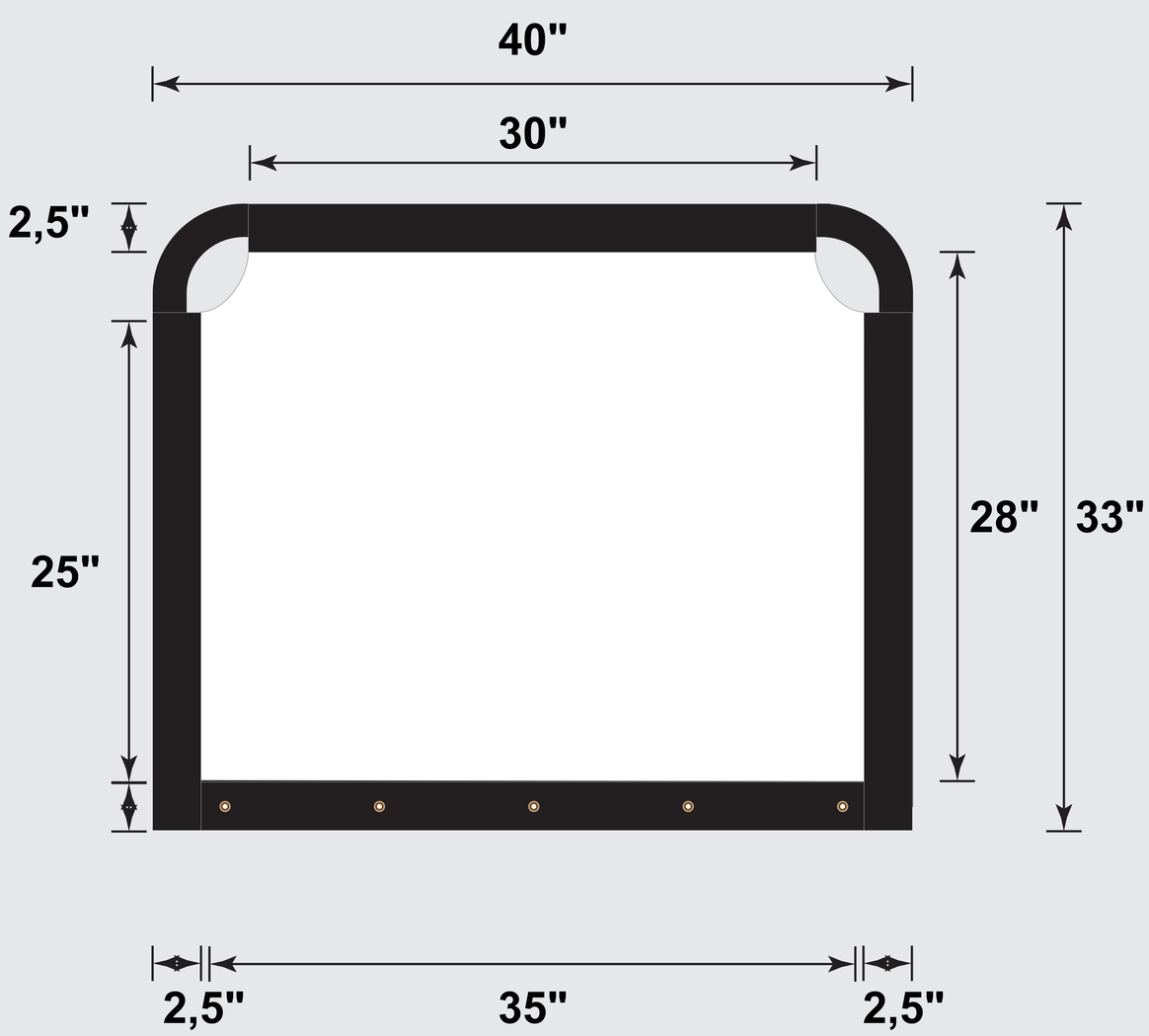

BACK

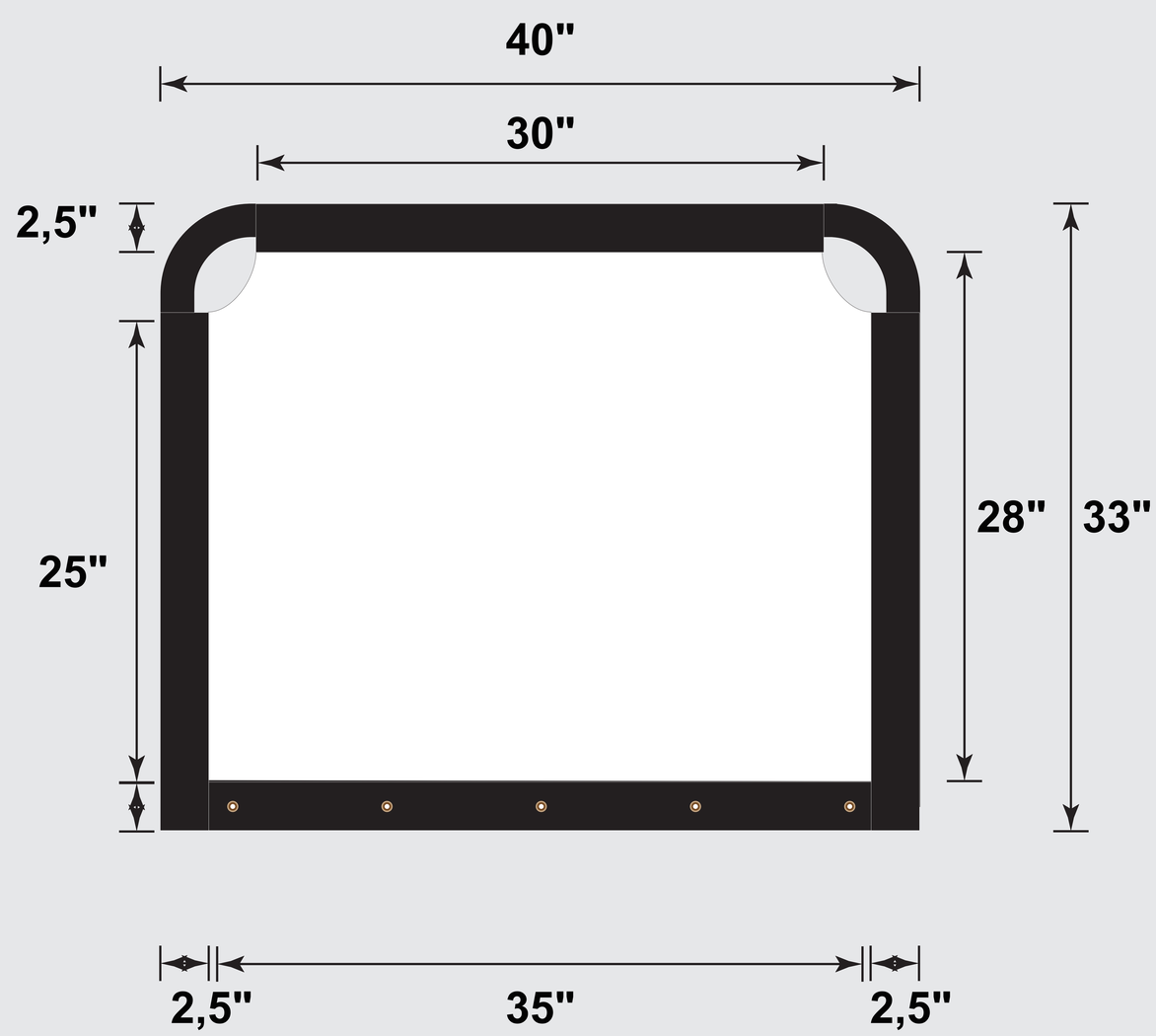

IMPORTANT

Please send artwork in CMYK color mode & note any PMS colors being used. This Template is designed at 10% scale of the final product. Please RASTERIZE artwork at a minimum of 300DPI to endure high quality print