40"w x 30h Side Hinge

THE GREAT EGRESS CO.

Recommended Rough Opening: 41"w x 31"h

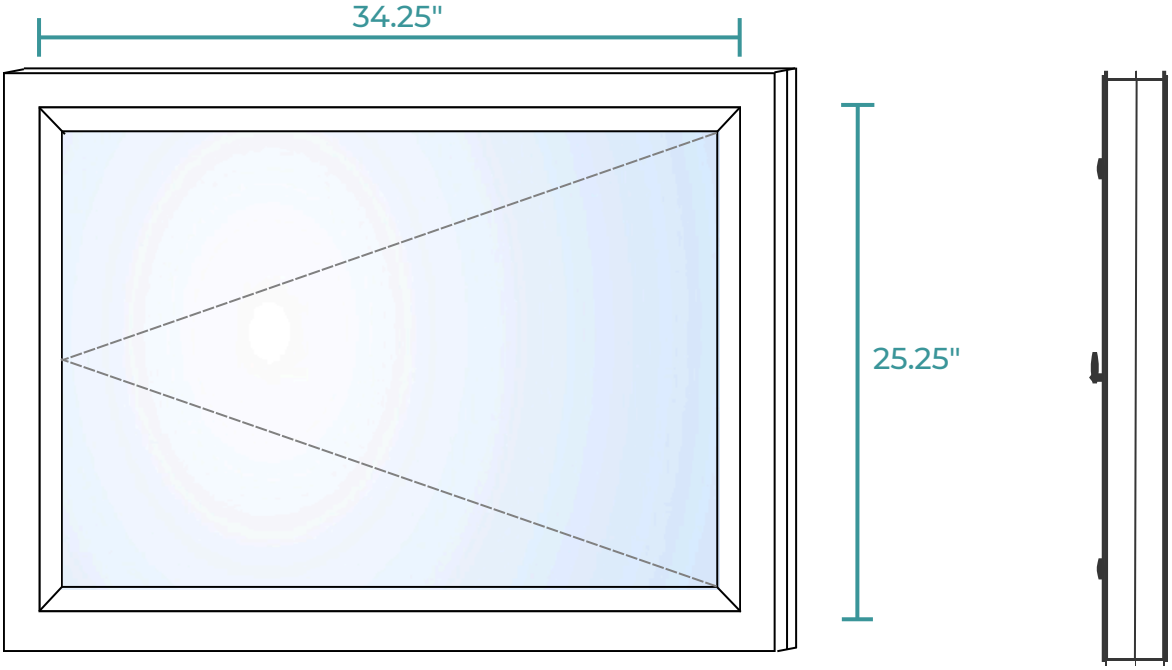

Measurement	Dimension	Area	Frame Thickness
Window Frame	40"w x 30"h		3.25"
Clear Opening	34.25"w x 25.25"h	6.01 Sq. Ft.	In-swinging Left or Right Hinged
Visible Glass	32.75"w x 22.25"h	5.17 Sq. Ft.	

Component Details

Foam-filled PVC frame with mitre cut welded corners
Aluminum lock and keeper mechanisms
Steel frame and sash hinge brackets
Removable spring-loaded insect screen

Glass Details

Double Paned Glass
97 Argon Gas Between Panes
Low-E 366 Exterior Coating
i89 Interior Coating

Thermal Properties

Solar Heat Gain Coefficient (SHGC):	0.17
U-Factor:	1.22 W/m2·K 0.215 Btu/h·ft2·F
Air leakage rate:	0.2 L/s·m2
Energy Rating* (ER):	23
Visual Transmittence:	0.39

+1 (833) 565-1199
842 Victoria St, Unit 17a, Kitchener
hello@thegreategressco.com
www.thegreategressco.com

Additional Testing Details

Forced-entry Resistance Test (ATSM F588)
F10 Rating

Thermoplastic Corner Weld Test (Clause 9.3.6.2)
Pass

Air Leakage Resistance Test (ATSM E283)
R class A3 Level
Infiltration = 0.035 cfm/ft2 - A3 Level
Exfiltration = 0.036 cfm/ft2 - A3 Level

Water Penetration Resistance Test (ATSM E547)
No Leakage or trapped water at 260 Pa
Water Application Rate: 1.492 L/min

Materials List

Frame / Sash / Frame Cover / Glazing Bead Profiles	PVC / Vinyl - Rigid
Glazing Gaskets	Flexible PVC / Vinyl with 40% softener
Glazing Tape	Elastomeric Foam, Flexible
Weatherstripping	Mohair
Weatherstripping Backing	Polypropylene
Foam Insulation	Polyurethane foam, blown
Spacer Bar	Super Spacer Premium
Spacer Bar Secondary Seal	Butyl Rubber (isobutene), Solid/Hot Melt

Notes

ER is a unitless metric used to determine the energy efficiency of fenestration systems in Canada. It is calculated as: ER = 57.76(SHGCw) – 21.90(Uw) – 1.97(L75) + 40, Where:

- SHGCw = Solar Heat Gain Coefficient
- Uw = U-Factor, (W/m2·K)
- L75 = Air leakage rate at a pressure difference of 75 Pa (L/s·m2)

Higher ER values are considered to indicate better energy efficiency and comfort.

SHGC measures the fraction of solar radiation admitted through a window. It ranges from 0 to 1, with lower values indicating less solar heat transmission.

U-factor is a measure of the rate of heat transfer through a window. A lower U-factor signifies better insulation and energy efficiency, which helps to maintain indoor temperatures. U-factor can be measured in metric (W/m2·K) or imperial (Btu/h·ft2·F) units. Both values are provided on this sheet.

VT measures the amount of visible light passing through a window. It ranges from 0 to 1, with higher values indicating more natural light entering the space

+1 (833) 565-1199
842 Victoria St, Unit 17a, Kitchener
hello@thegreategressco.com
www.thegreategressco.com