User Manual for RHF MOT 2PIN (IPOD)

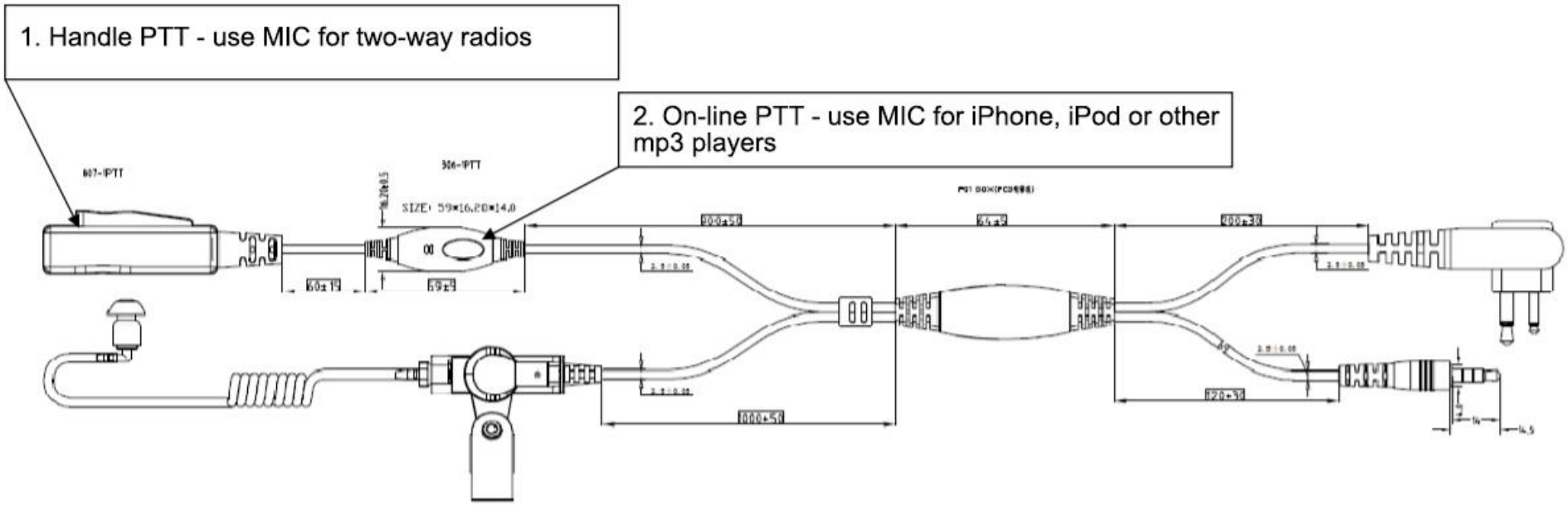

This radio headset can be used for Motorola 2-way radios (via the 2-Pin plug), and smartphones/mp3/mp4 players (via the 3.5mm plug)

1. **After plugging the headset into your 2-way radio and phone or mp3 player, you can use the headset to control both these devices at the same time.**
2. **Press the <u>On-line PTT button twice</u> to choose the next song when you're playing music from your phone or music player.**
3. **Press the <u>On-line PTT button once</u> to take the incoming phone call.**
4. **<u>Handle PTT with Mic</u> is designed for 2-Way Radio communications. When a 2-way radio signal comes in, the music/phone call on phone/mp3 player will automatically pause and then you can accept the incoming radio call from your two-way radio. When the 2-way radio transmission ends, it will immediately switch back to your device that's connected with the 3.5mm plug.**