NTCTRL-SR1009FA (WP)

Universal series RF Waterproof Receiver

09.009WP.04002

Important: *Read All Instructions Prior to Installation*

Function introduction

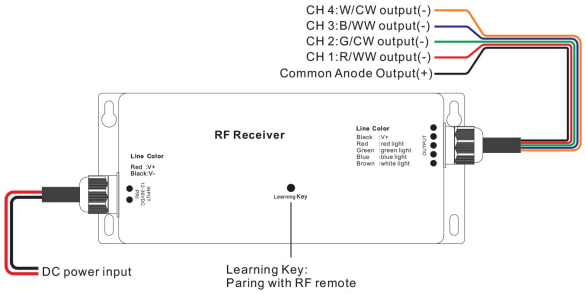

Product Data

No.	Input Voltage	Output Current	Output Power	Remarks	Size(LxWxH)
1	12-36VDC	4x5A	4x(60-180)W	Constant voltage	180.5x73.6x38mm
2	12-36VDC	4x350mA	4x(4.2-12.6)W	Constant current	180.5x73.6x38mm
3	12-36VDC	4x700mA	4x(8.4-25.2)W	Constant current	180.5x73.6x38mm

- Radio Frequency : 868/915/434mhz
- Waterproof grade: IP67

Safety & Warnings

- DO NOT install with power applied to device.
- This device is IP67 rating and protected against damp environment.

Operation

Do wiring according to connection diagram.

Pair RF Receiver with RF remote:

1. Connect and wire up the RF receiver correctly, power on.
2. Turn on the remote, click the **"Learning Key"** button on receiver, immediately click a zone number to pair the receiver to the specified zone if the remote is a multi-zone controller (if it is a single zone remote, this step is unnecessary), then touch the color wheel or slider bar on the remote (if the remote does not have color wheel or slider bar, click or touch any keys), the connected led light on receiver flickers twice, which means well paired.

Note: one receiver can be paired with max 8 remote controls.

Delete the pairing:

1. Wire up the RF receiver correctly, power on.
2. Hold down the **" Learning Key"** button on receiver for over 3 seconds until the connected led light on receiver flickers twice, which means well deleted.

Wiring Diagram

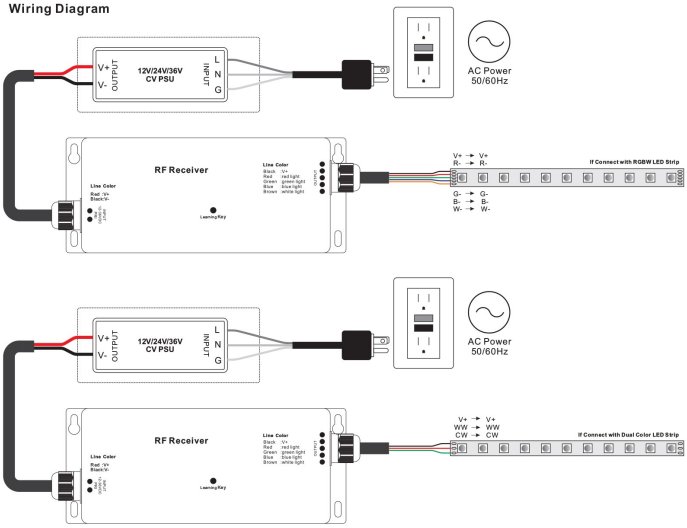

If you use multiple receivers, you have two choices:

Option 1: have all the receivers in the same zone, like zone 1

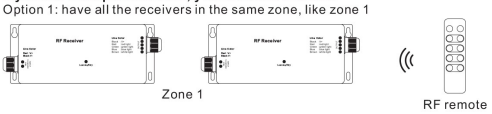

Option 2: have each receiver in a different zone, like zone 1, 2, 3 or 4