RSB SPINE

InterPlate™ C-PS PEEK –OPTIMA® Cervical Interbody Spacer

Surgical Technique

Developed by Robert S. Bray, Jr., M.D.

MKBR 1029-1.0

Indications and Features

Indications:

The C-PS PEEK cervical interbody spacer is indicated for intervertebral body fusion of the spine in skeletally mature patients. The device system is designed for use with autograft to facilitate fusion. One device is used per intervertebral space.

The C-PS is intended for use at one level in the cervical spine, from C3 to T1, for the treatment of cervical disc disease (defined as neck pain of discogenic origin with degeneration of the disc confirmed by history and radiographic studies). The device is to be used in patients who have had six weeks of non-operative treatment. The C-PS is intended to be used with a supplemental internal fixation system.

Features:

RANGE OF SIZES

The C-PS is available in heights of 6, 7, 8, 9, and 10mm and widths of 12 and 15mm. All spacers are lordosed 7º. Specific dimensions (mm) are shown in Figure 1.

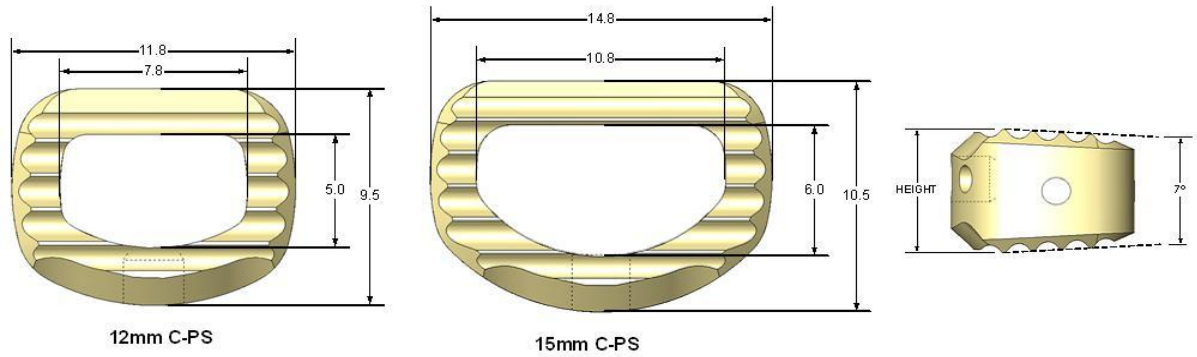

Figure 1.

GRAFT VOLUME

The interior of the C-PS accommodates a large volume of autograft material.

Height	6mm	7mm	8mm	9mm	10mm
12mm	210	245	280	315	350
15mm	324	378	432	486	540

Autograft Volume (mm^3)

PERIPHERAL SUPPORT

The C-PS is designed to seat around the perimeter of the endplate facilitating load transfer through the cortical shell.

PEEK OPTIMA POLYMER

The C-PS is constructed of PEEK polymer to facilitate fusion visualization. A radiodense titanium alloy marker rod is embedded in the posterior wall of the spacer.

EASE OF USE

The set is easy to use with very few instruments required for implantation. The set includes *Sizers*, which help insure correct implant fit. The set also includes an *Inserter* for removing the spacer from the caddy and implanting it between the vertebrae. The set is compact and lightweight.

Surgical Approach

Use the appropriate surgical approach for anterior cervical interbody fusion. Direct anterior access must be provided. Make provision for the distraction method of choice.

Surgical Technique

Surface Preparation:

The disc should be opened to provide full access to the disc space. Curettes and rongeurs are then used to remove the disc and cartilaginous cephalad and caudal endplates. Anterior osteophytes may need to be removed to improve visualization and access. Distraction may be adjusted during discectomy and decompression. The endplates should be flattened to maximize the spacer contact area.

It is important that the discectomy extend far enough laterally. In order to achieve fusion the cartilaginous endplates must be removed and contact between the spacer and endplates must be maximized. Gaps between the endplates and the spacer and central spacer graft chamber must be eliminated.

C-PS Selection:

Using the sizers, first determine the width required. Then sequentially increase the sizer height until a snug fit is achieved. The *Sizer* should fit snuggly, but not

tightly. **Only gentle impaction should be required to insert the *Sizer*.** In the medial-lateral direction, the width of the C-PS should fit within the available exposure. Fluoroscopy can be used to evaluate fit and position.

C-PS Implantation:

The spacer is docked to the Inserter by rotating the knob at the end of the handle clockwise (Figure 2). Two pins prevent rotation of the *Inserter* relative to the spacer (inset).

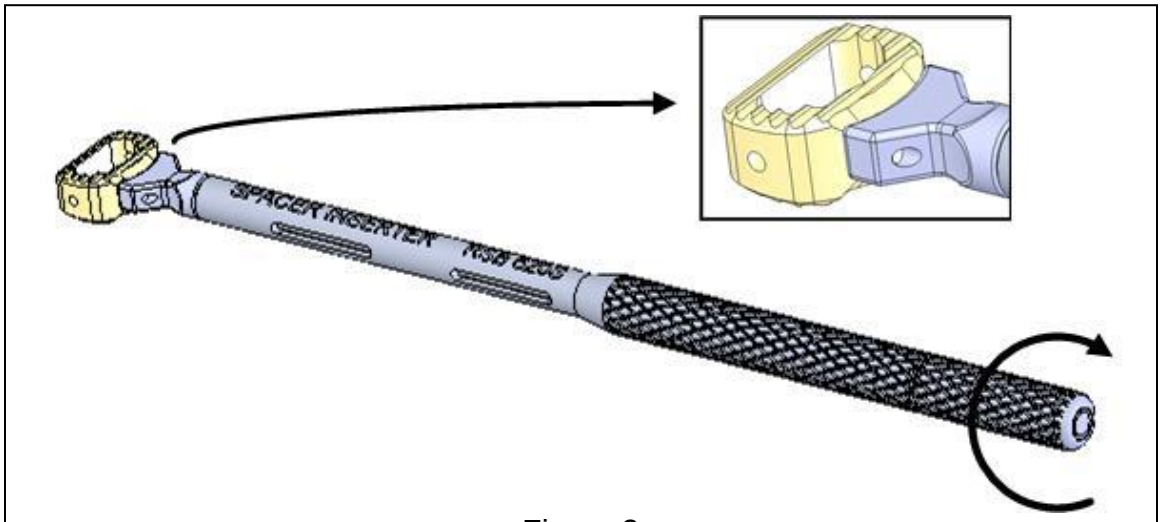

Figure 2

Pack the interior chamber of the C-PS with autograft. The autograft material should extend beyond the spacer by no more than 1mm.

Do not release distraction until after the spacer has been inserted. Only gentle impaction should be required to insert the C-PS. <u>NEVER use the C-PS attached to the *Inserter* as a sizer, distractor, or to pry apart or otherwise spread the vertebrae.</u> Only apply force along the axis of the inserter. <u>Check the spacer for damage after insertion.</u>

Confirming Proper Installation:

An x-ray or fluoroscopy should be used to confirm that the spacer is in the desired location. If misalignment is apparent, consideration should be given to repositioning the spacer.

Refer to the package insert for a complete list of warnings, precautions, indications, and contraindications.

RSB SPINE
2530 Superior Ave., Suite 703
Cleveland, OH 44114
216.241.2804
216.241.2820 (FAX)
866.241.2104 (Toll Free)