Tribesigns

LITTLE TREE

# Assembly Instructions

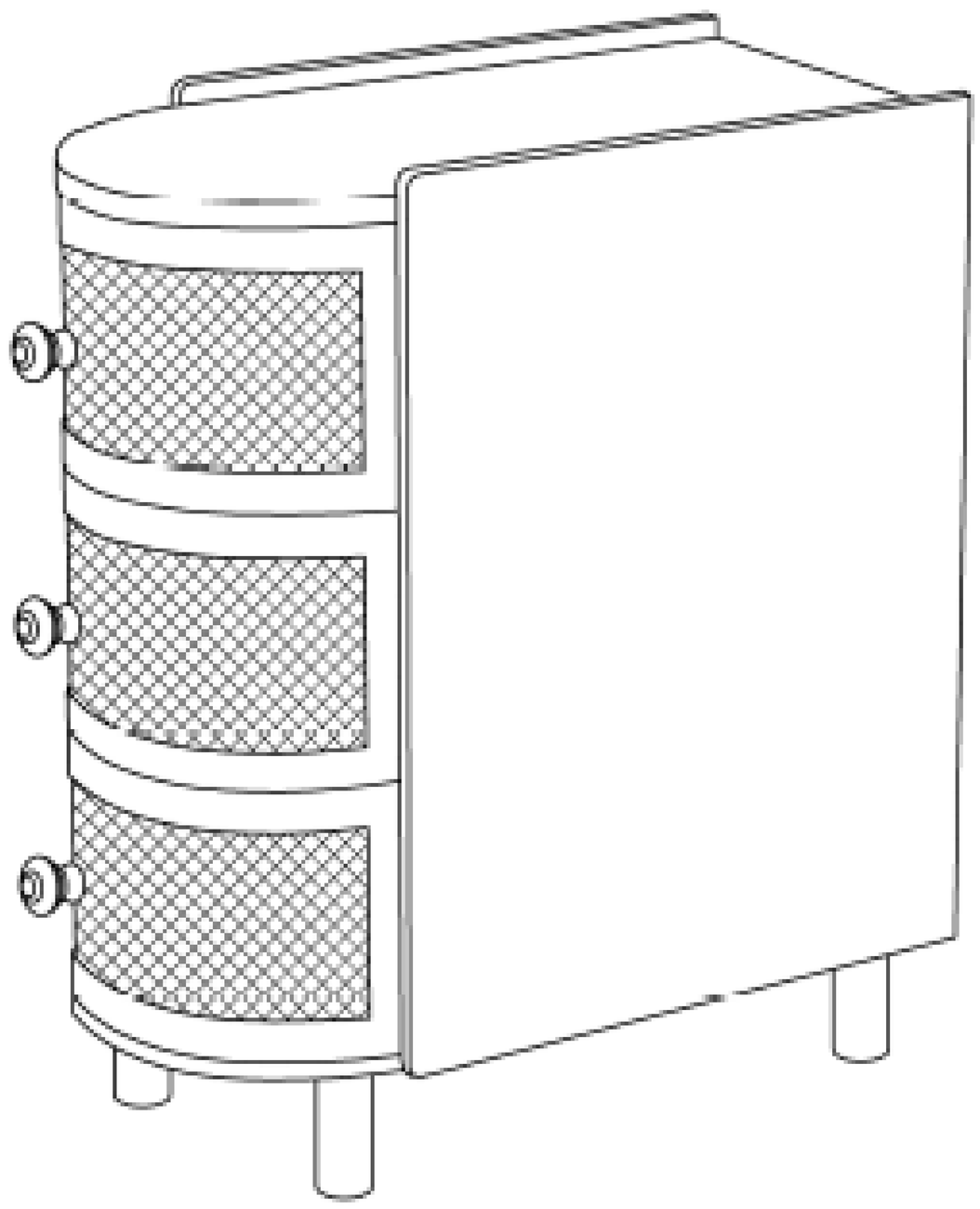

Model No. HOGA-XK00666

# Bedside Table

# Call us!

## We're here to help!

If you have any issues with this product, please contact our customer service team **before returning** it.

We want you to be completely satisfied with your purchase! If anything is missing, damaged, incorrect, the packaging and products, and then reach out to us at **support@tribesigns.com** or call us at **1-424-220-6888.** We'll take care of everything and send you a free replacement, so you can enjoy your purchase as soon as possible without any hassle.

## Assembly Instructions:

1. Carefully read these instructions and keep them for future reference.
2. Refer to the parts list for guidance and ensure that you have all the pieces before starting the assembly process, if anything is missing, damaged, incorrect, contact us FIRSTLY BEFORE assembling.
3. When assembling, place all parts on a soft, clean, and flat surface, such as a carpet, to prevent any scratches.
4. To avoid misalignment of the holes, Please don't full tighten the screws until you ensure all parts in place.

## Follow Tribesign:

Facebook Twitter Pinterest YouTube Instagram

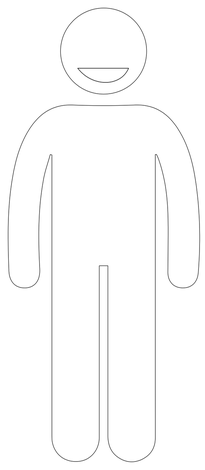

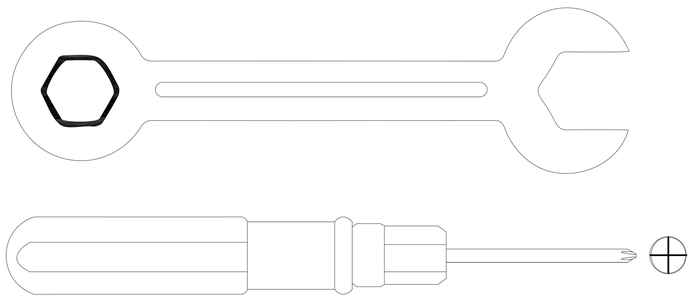

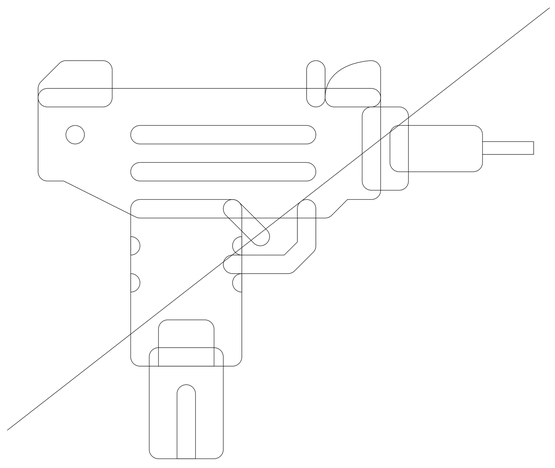

When using the electric screwdriver ,
Reduce the power and torque to avoid damaging the furniture

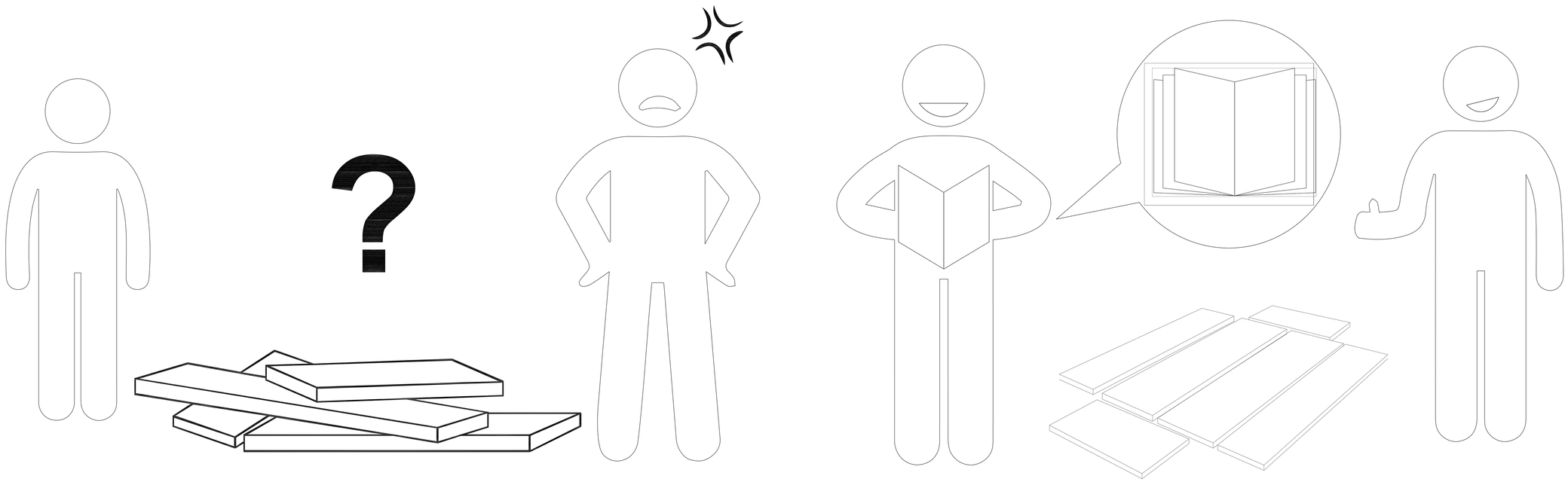


( Install tip-over restraint provided）

Use of tip-over restraints may only reduce but not eliminate,
the risk of tip-over.

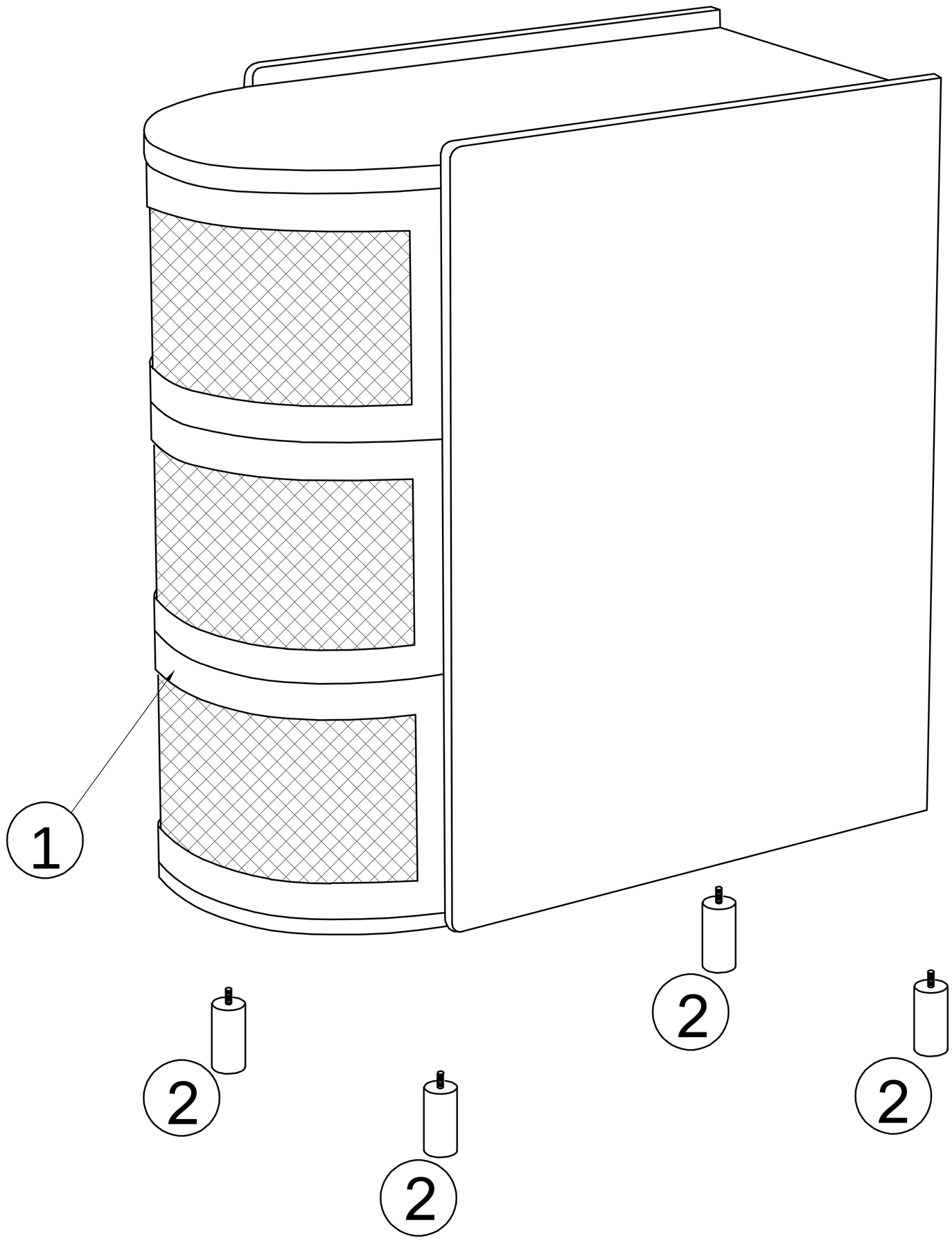


⚠ Caution

Make sure all parts are included. Most board parts are labeled or stamped on the raw edge.
Contach us for free replacement if having damaged or missing parts.

# Parts & Hardware List

| | | |
|---|---|---|
| 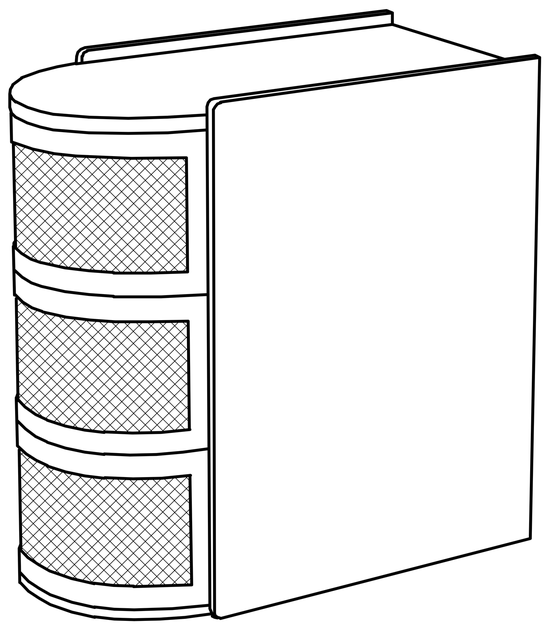 | 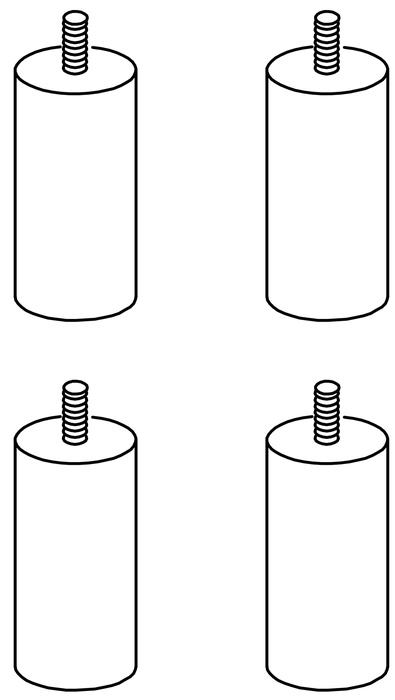 | 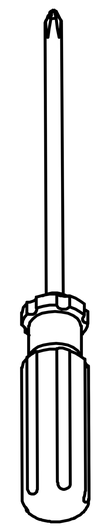 |
| ①1pc | ②4pcs | ③1pc |

1

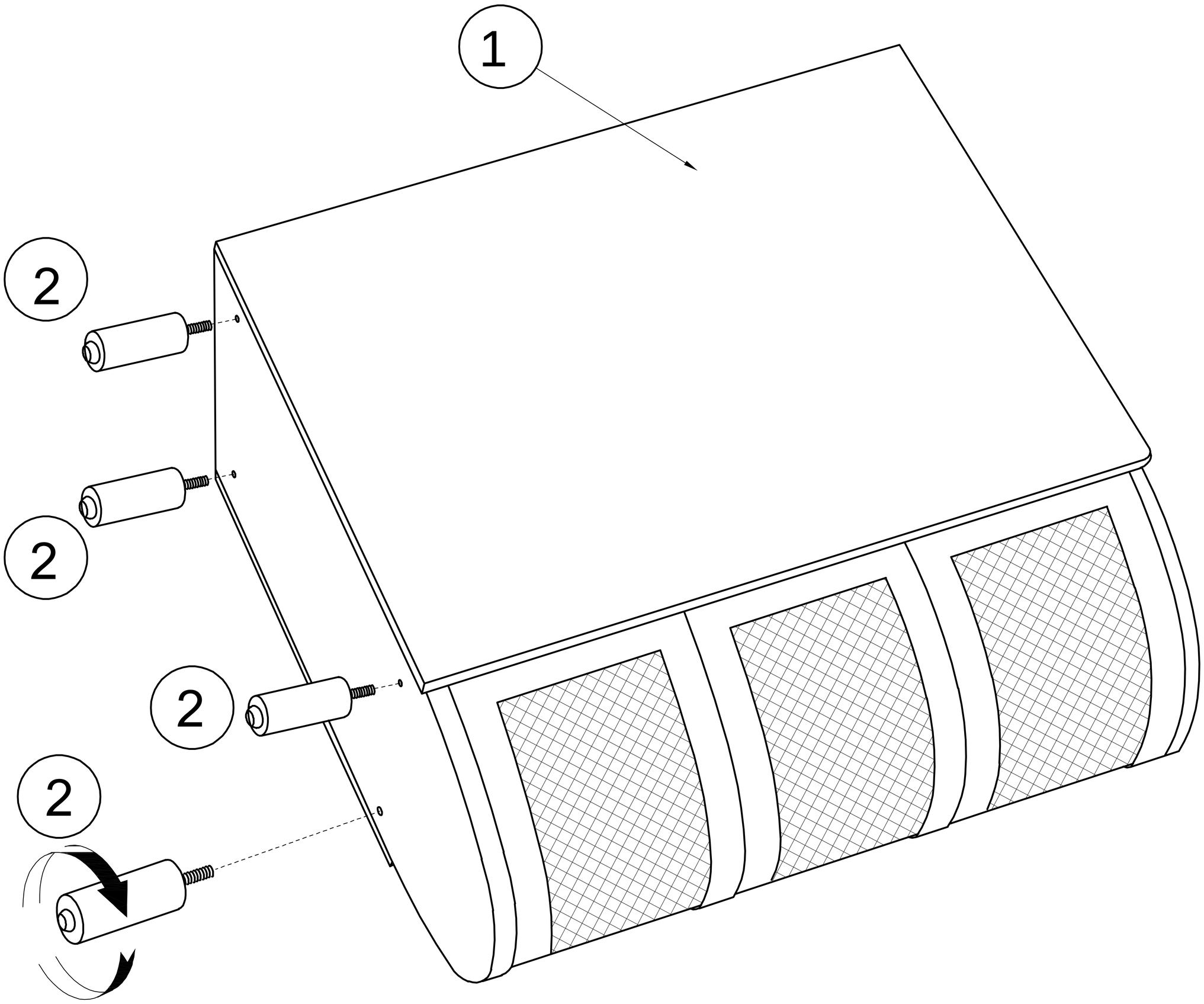

2

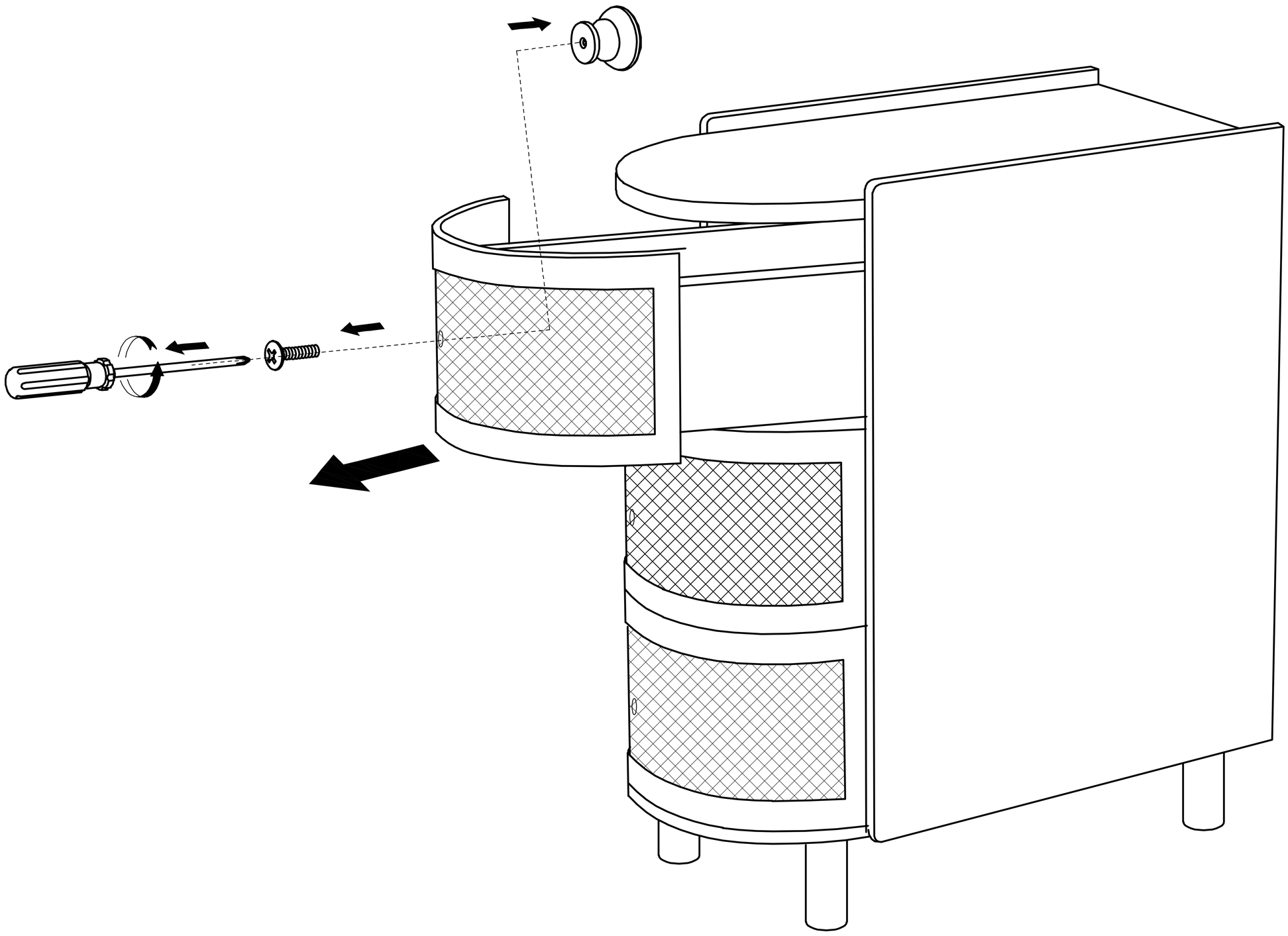

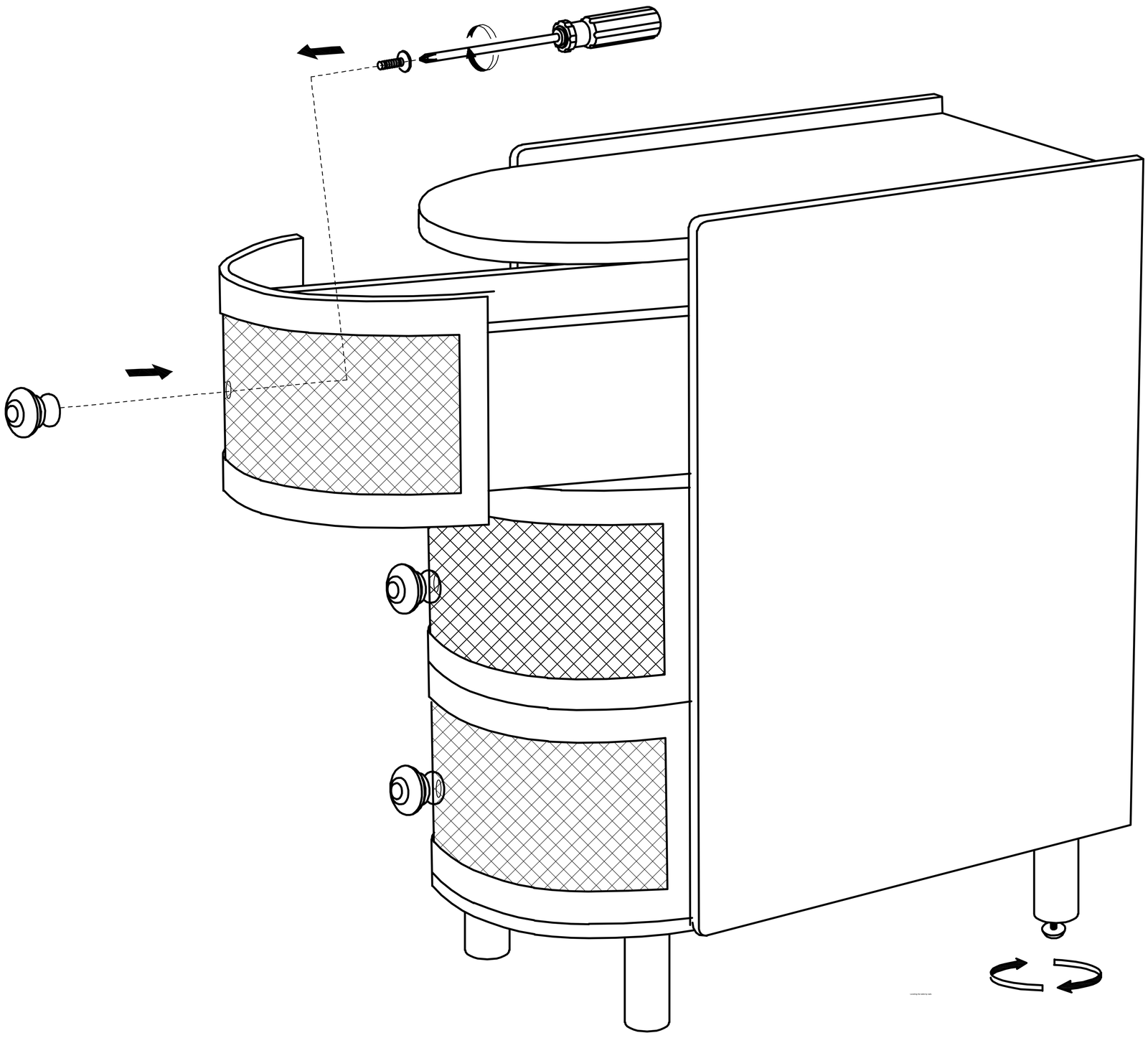

# No heartburn, when we handle the return

## Our way

- support@tribesigns.com
- Replacement/Refund
- You

## Their way

- Re-package item
- Schedule pick-up
- Track package
- Replacement
- You

Contact our customer service team

**support@tribesigns.com**
**www.tribesigns.com**

**1-424-220-6888**