LM80 Test Report

IES LM-80-08 Approved Method for Measuring Lumen Maintenance of LED Light Sources

Samsung Electronics LED Business Report

Report No. : SLED-17-014
Test Initiated Date : 2016.04.07
Test End Date : 2017.05.25
Report issued Date : 2017.06.13

Test result reported for	Testing performed by
SAMSUNG ELECTRONICS LED BUSINESS Lighting Marketing Group Tel) +82-31-8021-3231	**SAMSUNG ELECTRONICS LED BUSINESS** 1, Samsung-ro, Giheung-gu, Yongin-si, Gyeonggi-do 17113, Korea
Tested By KyungYeup Kwak	**Approved by SeungYoon Choi**
Test Personal Name & Signatory	**Approval Name & Signatory**

SAMSUNG ELECTRONICS LED BUSINESS Executive Vice President
Accredited by KOLAS, Republic of KOREA

The above testing certificate is the accredited testing items by Korea Laboratory Accreditation Scheme, which signed the ILAC-MRA.

This report may not be reproduced except in full
without permission of Samsung Electronics
SLED-TP-22-03(04)

SAMSUNG ELECTRONICS LED BUSINESS
1, Samsung-ro, Giheung-gu, Yongin-si,
Gyeonggi-do 17113, Korea

■ Test Summary ■

Life test condition			Summary of result		
Test condition	Current (mA)	Case temperature (℃)	Test duration (h)	Average lumen maintenance (%)	Maximum chromaticity shift (△u'v')
1	150	55.2 ℃	9 000	97.5	0.001 2
2	150	85.1 ℃	9 000	96.6	0.001 6
3	150	105.1 ℃	9 000	94.3	0.002 5

1. Number of LED light sources tested

- 20 Packages tested at actual case temperature 55.2 ℃
- 20 Packages tested at actual case temperature 85.1 ℃
- 20 Packages tested at actual case temperature 105.1 ℃

2. Description of LED light sources

- IF = 150 mA , CCT(Nominal) = 2 700 K
- Package Dimension : (5.6 × 3.0) ㎜
- Samsung Electronics LED Package : SPMWHT541M********

3. Description of auxiliary equipment

1) Instrument Integrating sphere ISP1000-100
2) Instrument CAS140-CT
3) Keithley 2425 Sourcemeter

4. Operating time

- 9 000 h at (55.2 ℃, 85.1 ℃ , 105.1 ℃)
- Drive current : 150 ㎃
- Typical voltage : 3 V

* LED packages are driven with a constant direct current.

5. Ambient conditions including airflow, temperature and relative humidity

The minimal airflow is maintained in chamber.

The ambient temperature around the LED packages inside chamber is controlled by air flowing and the thermocouple readings are monitored.

- Case temperature : Contorlled to -2 ℃
- Surrounding air temperature : Contorlled to -5 ℃
- Relative humidity : < 65 % R.H.

This report may not be reproduced except in full
without permission of Samsung Electronics

SAMSUNG ELECTRONICS LED BUSINESS
1, Samsung-ro, Giheung-gu, Yongin-si,
Gyeonggi-do 17113, Korea

6. Case temperature (Test point temperature)

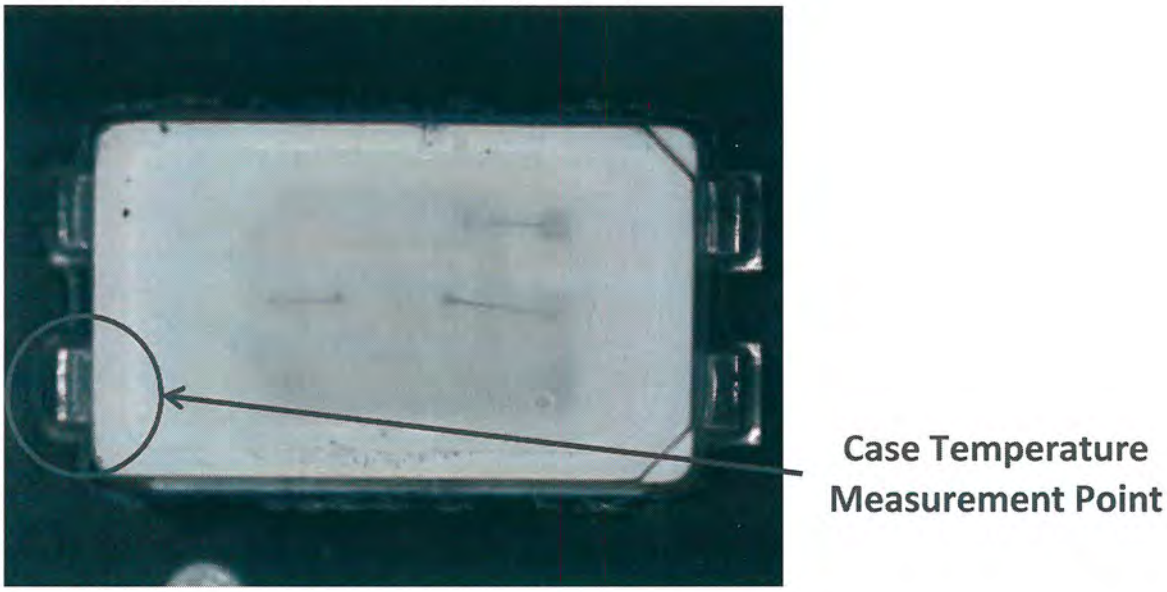

7. Drive current of the LED light source during lifetime test

See Sub-clause 9.1, 9.2 and 9.3

8. Initial luminous flux and forward voltage

See the table

9. Lumen maintenance data for each individual LED light source

See the table

This report may not be reproduced except in full
without permission of Samsung Electronics

SAMSUNG ELECTRONICS LED BUSINESS
1, Samsung-ro, Giheung-gu, Yongin-si,
Gyeonggi-do 17113, Korea

9.1 Test condition 1 **55 ℃**

Dirve Current **150 mA**

Measurement Current **150 mA**

No.	Flux (lm)	Vf (V)	Lumen Maintenance (%)						
	0 h		500 h	1 000 h	2 000 h	3 000 h	4 000 h	5 000 h	6 000 h
1	66.0	3.015	99.6	99.8	99.2	98.1	97.7	97.4	97.2
2	65.0	3.018	100.2	100.3	99.8	99.4	99.1	98.8	98.5
3	64.7	3.010	100.2	100.4	100.0	99.5	99.1	98.9	98.5
4	64.4	3.003	100.3	100.0	99.8	98.9	98.5	98.3	98.1
5	65.5	3.015	100.0	99.3	99.1	98.3	97.9	97.6	97.4
6	64.9	3.012	100.4	100.4	100.1	99.6	99.0	98.6	98.4
7	65.2	3.006	100.4	99.9	99.7	99.3	98.9	98.4	98.2
8	65.3	3.004	100.1	99.3	98.8	98.4	98.0	97.3	97.2
9	64.2	2.999	99.7	100.2	99.7	99.0	98.7	98.0	97.7
10	65.4	3.006	99.9	100.1	99.6	99.4	98.2	98.0	97.6
11	65.5	3.005	100.6	100.4	100.1	99.7	99.4	98.9	98.7
12	65.3	3.001	100.5	100.2	99.4	99.2	99.0	98.5	98.4
13	65.3	2.999	100.3	100.3	99.8	98.9	98.6	98.2	97.8
14	65.6	3.009	100.3	100.2	99.6	99.2	99.0	98.5	98.1
15	65.0	3.008	100.3	100.1	99.2	99.0	98.7	98.2	97.9
16	65.5	3.002	100.3	99.8	99.6	99.4	99.0	98.5	98.2
17	65.0	3.002	100.4	99.7	98.9	98.4	98.0	98.0	97.7
18	64.3	3.011	100.2	100.4	100.1	100.0	99.7	99.2	98.9
19	64.9	3.007	100.6	100.5	100.1	99.7	99.4	98.9	98.5
20	64.9	3.023	100.1	100.0	99.4	99.2	98.3	97.9	97.6
Mean	65.1	3.01	100.2	100.1	99.6	99.1	98.7	98.3	98.0
Median	65.1	3.01	100.3	100.2	99.6	99.2	98.8	98.4	98.1
std.dev	0.5	0.01	0.3	0.4	0.4	0.5	0.5	0.5	0.5
Max	66.0	3.02	100.6	100.5	100.1	100.0	99.7	99.2	98.9
Min	64.2	3.00	99.6	99.3	98.8	98.1	97.7	97.3	97.2

This report may not be reproduced except in full
without permission of Samsung Electronics

SAMSUNG ELECTRONICS LED BUSINESS
1, Samsung-ro, Giheung-gu, Yongin-si,
Gyeonggi-do 17113, Korea

9.1 Test condition 1 **55 ℃**

Dirve Current **150 mA**

Measurement Current **150 mA**

No.	Lumen Maintenance (%)								
	7 000 h	8 000 h	9 000 h	10 000 h	11 000 h	12 000 h	13 000 h	14 000 h	15 000 h
1	97.0	97.0	96.7						
2	98.4	98.2	98.0						
3	98.4	98.3	98.1						
4	98.0	97.9	97.7						
5	97.2	97.0	96.7						
6	98.2	98.1	97.9						
7	98.0	97.9	97.6						
8	97.0	96.9	96.5						
9	97.6	97.4	97.2						
10	97.4	97.4	97.2						
11	98.4	98.3	98.1						
12	98.1	98.0	97.8						
13	97.7	97.6	97.5						
14	97.9	97.8	97.5						
15	97.7	97.5	97.2						
16	98.0	97.8	97.7						
17	97.3	97.2	97.2						
18	98.6	98.5	98.2						
19	98.3	98.1	97.9						
20	97.4	97.2	96.9						
Mean	97.8	97.7	97.5						
Median	97.9	97.8	97.6						
std.dev	0.5	0.5	0.5						
Max	98.6	98.5	98.2						
Min	97.0	96.9	96.5						

This report may not be reproduced except in full
without permission of Samsung Electronics

SAMSUNG ELECTRONICS LED BUSINESS
1, Samsung-ro, Giheung-gu, Yongin-si,
Gyeonggi-do 17113, Korea

9.1 Test condition 1 **55 ℃**

Dirve Current **150 mA**

Measurement Current **150 mA**

No.	Cx	Cy	Chromaticity Shift (△u'v')						
	0 h		500 h	1 000 h	2 000 h	3 000 h	4 000 h	5 000 h	6 000 h
1	0.460 1	0.415 1	0.000 2	0.000 4	0.000 0	0.000 2	0.000 2	0.000 4	0.000 3
2	0.462 3	0.411 7	0.000 3	0.000 2	0.000 2	0.000 1	0.000 2	0.000 1	0.000 2
3	0.460 2	0.409 1	0.000 2	0.000 2	0.000 1	0.000 1	0.000 2	0.000 3	0.000 3
4	0.462 3	0.411 4	0.000 3	0.000 3	0.000 3	0.000 3	0.000 2	0.000 5	0.000 4
5	0.456 7	0.405 9	0.000 1	0.000 7	0.000 5	0.000 7	0.000 6	0.000 9	0.000 8
6	0.457 1	0.405 5	0.000 2	0.000 2	0.000 6	0.000 3	0.000 2	0.000 3	0.000 4
7	0.467 9	0.413 1	0.000 3	0.000 4	0.000 5	0.000 5	0.000 5	0.000 7	0.000 7
8	0.457 2	0.408 7	0.000 4	0.000 3	0.000 4	0.000 4	0.000 2	0.000 4	0.000 3
9	0.457 2	0.405 8	0.000 5	0.000 3	0.000 1	0.000 3	0.000 1	0.000 4	0.000 4
10	0.462 5	0.409 9	0.000 4	0.000 4	0.001 0	0.000 8	0.001 2	0.001 3	0.001 3
11	0.457 6	0.406 4	0.000 3	0.000 2	0.000 1	0.000 0	0.000 1	0.000 2	0.000 3
12	0.463 4	0.413 0	0.000 3	0.000 4	0.001 0	0.000 7	0.000 5	0.000 6	0.000 6
13	0.462 9	0.412 1	0.000 1	0.000 1	0.000 2	0.000 4	0.000 2	0.000 4	0.000 4
14	0.453 2	0.404 3	0.000 1	0.000 2	0.000 2	0.000 2	0.000 2	0.000 4	0.000 3
15	0.459 2	0.406 0	0.000 2	0.000 2	0.000 5	0.000 4	0.000 3	0.000 6	0.000 5
16	0.463 9	0.411 0	0.000 1	0.000 4	0.000 3	0.000 3	0.000 3	0.000 4	0.000 4
17	0.471 3	0.415 7	0.000 2	0.000 5	0.000 6	0.000 6	0.000 5	0.000 6	0.000 7
18	0.462 6	0.408 1	0.000 7	0.000 6	0.000 6	0.000 6	0.000 5	0.000 8	0.000 7
19	0.459 6	0.408 8	0.000 4	0.000 3	0.000 1	0.000 2	0.000 3	0.000 2	0.000 2
20	0.463 3	0.412 8	0.000 1	0.000 2	0.000 0	0.000 3	0.000 8	0.000 8	0.000 9
Mean	0.461 0	0.409 7	0.000 3	0.000 3	0.000 4	0.000 4	0.000 4	0.000 5	0.000 5
Median	0.461 2	0.409 5	0.000 3	0.000 3	0.000 3	0.000 3	0.000 2	0.000 4	0.000 4
std.dev	0.004 1	0.003 4	0.000 1	0.000 2	0.000 3	0.000 2	0.000 3	0.000 3	0.000 3
Max	0.471 3	0.415 7	0.000 7	0.000 7	0.001 0	0.000 8	0.001 2	0.001 3	0.001 3
Min	0.453 2	0.404 3	0.000 1	0.000 1	0.000 0	0.000 0	0.000 1	0.000 1	0.000 2

This report may not be reproduced except in full
without permission of Samsung Electronics

SAMSUNG ELECTRONICS LED BUSINESS
1, Samsung-ro, Giheung-gu, Yongin-si,
Gyeonggi-do 17113, Korea

9.1 Test condition 1 **55 ℃**

Dirve Current **150 mA**

Measurement Current **150 mA**

No.	Chromaticity Shift (△u'v')								
	7 000 h	8 000 h	9 000 h	10 000 h	11 000 h	12 000 h	13 000 h	14 000 h	15 000 h
1	0.000 2	0.000 3	0.000 3						
2	0.000 2	0.000 1	0.000 2						
3	0.000 3	0.000 3	0.000 2						
4	0.000 5	0.000 5	0.000 5						
5	0.000 7	0.000 8	0.000 7						
6	0.000 3	0.000 4	0.000 3						
7	0.000 7	0.000 7	0.000 8						
8	0.000 3	0.000 3	0.000 4						
9	0.000 4	0.000 6	0.000 6						
10	0.001 3	0.001 3	0.001 2						
11	0.000 3	0.000 3	0.000 3						
12	0.000 6	0.000 8	0.000 7						
13	0.000 5	0.000 5	0.000 4						
14	0.000 4	0.000 4	0.000 4						
15	0.000 5	0.000 6	0.000 6						
16	0.000 4	0.000 4	0.000 4						
17	0.000 6	0.000 6	0.000 6						
18	0.000 8	0.000 9	0.000 9						
19	0.000 2	0.000 2	0.000 3						
20	0.000 9	0.000 9	0.001 0						
Mean	0.000 5	0.000 5	0.000 5						
Median	0.000 4	0.000 5	0.000 5						
std.dev	0.000 3	0.000 3	0.000 3						
Max	0.001 3	0.001 3	0.001 2						
Min	0.000 2	0.000 1	0.000 2						

This report may not be reproduced except in full
without permission of Samsung Electronics

SAMSUNG ELECTRONICS LED BUSINESS
1, Samsung-ro, Giheung-gu, Yongin-si,
Gyeonggi-do 17113, Korea

9.1 Test condition 1 **55 ℃**

Dirve Current **150 mA**

Measurement Current **150 mA**

No.	CCT (K)							
	0 h	500 h	1 000 h	2 000 h	3 000 h	4 000 h	5 000 h	6 000 h
1	2 728	2 730	2 735	2 729	2 728	2 730	2 735	2 733
2	2 669	2 665	2 668	2 666	2 669	2 665	2 670	2 670
3	2 679	2 677	2 678	2 678	2 681	2 682	2 684	2 683
4	2 666	2 664	2 671	2 673	2 673	2 669	2 676	2 675
5	2 702	2 701	2 717	2 713	2 717	2 716	2 722	2 720
6	2 693	2 695	2 694	2 705	2 699	2 697	2 700	2 701
7	2 604	2 603	2 612	2 614	2 614	2 613	2 617	2 618
8	2 718	2 726	2 723	2 721	2 720	2 721	2 722	2 723
9	2 693	2 704	2 688	2 693	2 696	2 696	2 703	2 703
10	2 650	2 658	2 657	2 671	2 668	2 676	2 678	2 678
11	2 694	2 689	2 696	2 695	2 695	2 695	2 698	2 700
12	2 664	2 660	2 672	2 684	2 678	2 674	2 676	2 677
13	2 664	2 662	2 663	2 667	2 671	2 668	2 673	2 671
14	2 741	2 741	2 742	2 745	2 746	2 745	2 749	2 748
15	2 665	2 664	2 669	2 675	2 673	2 672	2 678	2 677
16	2 640	2 640	2 648	2 647	2 646	2 645	2 648	2 648
17	2 579	2 576	2 589	2 590	2 590	2 589	2 590	2 593
18	2 636	2 650	2 649	2 649	2 648	2 646	2 653	2 651
19	2 683	2 678	2 680	2 682	2 687	2 681	2 686	2 686
20	2 663	2 662	2 662	2 662	2 670	2 679	2 680	2 681
Mean	2 672	2 672	2 676	2 678	2 678	2 678	2 682	2 682
Median	2 668	2 665	2 672	2 677	2 675	2 677	2 679	2 679
std.dev	39	40	37	37	37	37	37	37
Max	2 741	2 741	2 742	2 745	2 746	2 745	2 749	2 748
Min	2 579	2 576	2 589	2 590	2 590	2 589	2 590	2 593

This report may not be reproduced except in full
without permission of Samsung Electronics

SAMSUNG ELECTRONICS LED BUSINESS
1, Samsung-ro, Giheung-gu, Yongin-si,
Gyeonggi-do 17113, Korea

9.1 Test condition 1 **55 ℃**

Dirve Current **150 mA**

Measurement Current **150 mA**

No.	CCT (K)								
	7 000 h	8 000 h	9 000 h	10 000 h	11 000 h	12 000 h	13 000 h	14 000 h	15 000 h
1	2 732	2 733	2 733						
2	2 670	2 670	2 669						
3	2 683	2 684	2 681						
4	2 676	2 676	2 675						
5	2 718	2 720	2 718						
6	2 699	2 700	2 699						
7	2 618	2 619	2 619						
8	2 723	2 724	2 726						
9	2 703	2 706	2 706						
10	2 678	2 677	2 677						
11	2 699	2 699	2 699						
12	2 677	2 681	2 679						
13	2 674	2 674	2 674						
14	2 749	2 751	2 750						
15	2 677	2 679	2 679						
16	2 648	2 648	2 647						
17	2 590	2 591	2 591						
18	2 653	2 654	2 655						
19	2 686	2 687	2 689						
20	2 682	2 682	2 683						
Mean	2 682	2 683	2 683						
Median	2 680	2 681	2 680						
std.dev	37	37	37						
Max	2 749	2 751	2 750						
Min	2 590	2 591	2 591						

This report may not be reproduced except in full
without permission of Samsung Electronics

SAMSUNG ELECTRONICS LED BUSINESS
1, Samsung-ro, Giheung-gu, Yongin-si,
Gyeonggi-do 17113, Korea

9.2 Test condition 2 **85 ℃**

Dirve Current **150 mA**

Measurement Current **150 mA**

No.	Flux (lm)	Vf (V)	Lumen Maintenance (%)						
	0 h		500 h	1 000 h	2 000 h	3 000 h	4 000 h	5 000 h	6 000 h
1	65.4	3.014	100.2	99.9	99.3	98.6	97.8	97.5	97.1
2	65.1	3.010	100.1	99.7	99.3	98.6	97.8	97.7	97.3
3	65.0	3.005	100.0	100.1	99.5	98.7	97.9	97.7	97.4
4	64.8	3.010	100.2	100.3	99.7	99.0	98.2	98.0	97.7
5	65.3	3.021	100.3	99.9	99.1	98.5	97.7	97.5	97.1
6	65.7	3.019	100.1	99.4	98.9	98.2	97.3	97.2	96.9
7	65.5	3.010	100.2	100.0	99.2	98.6	97.8	97.6	97.2
8	65.4	3.001	100.0	100.0	99.4	98.6	97.9	97.6	97.3
9	65.3	3.020	100.1	100.2	99.6	98.9	98.1	98.0	97.5
10	65.4	3.006	99.7	99.4	98.9	98.3	97.5	97.2	96.9
11	64.9	3.003	100.1	100.0	99.4	98.7	98.0	97.7	97.5
12	66.0	3.003	99.9	99.9	99.2	98.3	97.6	97.3	97.1
13	64.6	3.016	99.7	99.4	98.8	98.0	97.1	97.0	96.6
14	65.9	3.011	100.3	99.9	99.4	98.5	97.8	97.6	97.3
15	65.3	3.024	100.0	99.9	99.2	98.4	97.8	97.5	97.1
16	64.8	3.011	100.2	100.2	99.3	98.0	97.2	96.8	96.4
17	64.6	2.998	99.9	99.8	98.6	98.1	97.0	96.8	96.2
18	65.7	3.003	100.3	100.4	100.0	99.2	98.5	98.3	97.9
19	65.3	3.001	99.8	99.8	99.2	98.5	98.0	97.5	97.1
20	63.5	3.004	100.4	100.3	99.6	98.8	98.3	97.9	97.5
Mean	65.2	3.01	100.1	99.9	99.3	98.5	97.8	97.5	97.2
Median	65.3	3.01	100.1	99.9	99.3	98.5	97.8	97.6	97.2
std.dev	0.6	0.01	0.2	0.3	0.3	0.3	0.4	0.4	0.4
Max	66.0	3.02	100.4	100.4	100.0	99.2	98.5	98.3	97.9
Min	63.5	3.00	99.7	99.4	98.6	98.0	97.0	96.8	96.2

This report may not be reproduced except in full
without permission of Samsung Electronics

SAMSUNG ELECTRONICS LED BUSINESS
1, Samsung-ro, Giheung-gu, Yongin-si,
Gyeonggi-do 17113, Korea

9.2 Test condition 2 **85 ℃**

Dirve Current **150 mA**

Measurement Current **150 mA**

No.	Lumen Maintenance (%)								
	7 000 h	8 000 h	9 000 h	10 000 h	11 000 h	12 000 h	13 000 h	14 000 h	15 000 h
1	96.7	96.6	96.7						
2	97.2	97.1	96.8						
3	97.1	96.9	97.0						
4	97.4	97.1	97.0						
5	96.7	96.6	96.6						
6	96.4	96.3	96.3						
7	96.9	96.7	96.7						
8	97.1	96.7	96.7						
9	97.4	97.1	97.1						
10	96.5	96.5	96.6						
11	97.4	97.2	96.9						
12	96.8	96.6	96.6						
13	96.1	96.0	96.0						
14	97.1	96.9	96.8						
15	96.7	96.6	96.6						
16	95.9	95.6	95.5						
17	96.0	95.8	95.7						
18	97.6	97.4	97.2						
19	96.9	96.5	96.6						
20	97.2	97.0	96.8						
Mean	96.9	96.7	96.6						
Median	96.9	96.7	96.7						
std.dev	0.5	0.5	0.4						
Max	97.6	97.4	97.2						
Min	95.9	95.6	95.5						

This report may not be reproduced except in full
without permission of Samsung Electronics

SAMSUNG ELECTRONICS LED BUSINESS
1, Samsung-ro, Giheung-gu, Yongin-si,
Gyeonggi-do 17113, Korea

9.2 Test condition 2 **85 ℃**

Dirve Current **150 mA**

Measurement Current **150 mA**

No.	Cx	Cy	Chromaticity Shift (△u'v')						
	0 h		500 h	1 000 h	2 000 h	3 000 h	4 000 h	5 000 h	6 000 h
1	0.458 9	0.406 9	0.000 1	0.000 4	0.000 5	0.000 5	0.000 6	0.000 7	0.000 7
2	0.465 8	0.410 2	0.000 2	0.000 4	0.000 2	0.000 2	0.000 2	0.000 4	0.000 4
3	0.460 0	0.408 9	0.000 2	0.000 3	0.000 3	0.000 2	0.000 3	0.000 5	0.000 5
4	0.460 9	0.408 2	0.000 2	0.000 4	0.000 7	0.000 7	0.000 8	0.000 9	0.001 0
5	0.463 6	0.411 0	0.000 3	0.000 3	0.000 5	0.000 6	0.000 6	0.000 8	0.000 9
6	0.454 9	0.406 2	0.000 3	0.000 5	0.000 5	0.000 5	0.000 4	0.000 6	0.000 7
7	0.456 6	0.404 1	0.000 4	0.000 8	0.000 9	0.000 9	0.001 1	0.001 2	0.001 2
8	0.460 3	0.408 5	0.000 1	0.000 3	0.000 3	0.000 3	0.000 3	0.000 3	0.000 5
9	0.452 9	0.403 1	0.000 6	0.000 6	0.000 5	0.000 5	0.000 7	0.000 9	0.000 8
10	0.464 7	0.412 1	0.000 3	0.000 5	0.000 5	0.000 5	0.000 5	0.000 6	0.000 8
11	0.461 0	0.407 0	0.000 2	0.000 3	0.000 3	0.000 2	0.000 4	0.000 6	0.000 6
12	0.459 8	0.410 1	0.000 2	0.000 2	0.000 2	0.000 3	0.000 5	0.000 5	0.000 6
13	0.466 0	0.414 7	0.000 2	0.000 3	0.000 4	0.000 6	0.000 6	0.000 7	0.000 7
14	0.462 1	0.411 8	0.000 2	0.000 9	0.000 8	0.000 8	0.000 8	0.001 0	0.001 0
15	0.467 7	0.416 9	0.000 2	0.000 2	0.000 3	0.000 3	0.000 3	0.000 6	0.000 5
16	0.464 2	0.408 9	0.000 2	0.000 3	0.000 6	0.001 0	0.001 2	0.001 3	0.001 3
17	0.457 2	0.404 9	0.000 1	0.000 2	0.000 6	0.000 8	0.000 9	0.001 0	0.001 0
18	0.453 2	0.406 1	0.000 6	0.000 5	0.000 5	0.000 5	0.000 6	0.000 8	0.000 8
19	0.463 8	0.411 4	0.000 2	0.000 5	0.000 5	0.000 4	0.000 6	0.000 8	0.000 8
20	0.460 6	0.407 1	0.000 1	0.000 3	0.000 4	0.000 4	0.000 5	0.000 7	0.000 7
Mean	0.460 7	0.408 9	0.000 3	0.000 4	0.000 5	0.000 5	0.000 6	0.000 7	0.000 8
Median	0.460 8	0.408 7	0.000 2	0.000 3	0.000 5	0.000 5	0.000 6	0.000 7	0.000 8
std.dev	0.004 2	0.003 5	0.000 1	0.000 2	0.000 2	0.000 2	0.000 3	0.000 2	0.000 2
Max	0.467 7	0.416 9	0.000 6	0.000 9	0.000 9	0.001 0	0.001 2	0.001 3	0.001 3
Min	0.452 9	0.403 1	0.000 1	0.000 2	0.000 2	0.000 2	0.000 2	0.000 3	0.000 4

This report may not be reproduced except in full
without permission of Samsung Electronics

SAMSUNG ELECTRONICS LED BUSINESS
1, Samsung-ro, Giheung-gu, Yongin-si,
Gyeonggi-do 17113, Korea

9.2 Test condition 2 **85 ℃**

Dirve Current **150 mA**

Measurement Current **150 mA**

No.	Chromaticity Shift (△u'v')								
	7 000 h	8 000 h	9 000 h	10 000 h	11 000 h	12 000 h	13 000 h	14 000 h	15 000 h
1	0.000 7	0.000 8	0.000 8						
2	0.000 5	0.000 6	0.000 7						
3	0.000 5	0.000 6	0.000 6						
4	0.001 0	0.001 1	0.001 0						
5	0.000 8	0.000 9	0.001 3						
6	0.000 6	0.000 8	0.000 6						
7	0.001 2	0.001 3	0.001 6						
8	0.000 5	0.000 6	0.000 6						
9	0.000 9	0.000 9	0.001 4						
10	0.000 7	0.000 8	0.000 8						
11	0.000 6	0.000 6	0.000 7						
12	0.000 6	0.000 7	0.000 9						
13	0.000 7	0.000 8	0.000 8						
14	0.001 1	0.001 1	0.001 3						
15	0.000 5	0.000 7	0.000 6						
16	0.001 3	0.001 4	0.001 5						
17	0.001 0	0.001 1	0.001 1						
18	0.000 8	0.000 9	0.000 9						
19	0.000 9	0.001 2	0.001 4						
20	0.000 8	0.000 8	0.000 8						
Mean	0.000 8	0.000 9	0.001 0						
Median	0.000 8	0.000 8	0.000 8						
std.dev	0.000 2	0.000 2	0.000 3						
Max	0.001 3	0.001 4	0.001 6						
Min	0.000 5	0.000 6	0.000 6						

This report may not be reproduced except in full
without permission of Samsung Electronics

SAMSUNG ELECTRONICS LED BUSINESS
1, Samsung-ro, Giheung-gu, Yongin-si,
Gyeonggi-do 17113, Korea

9.2 Test condition 2 **85 ℃**

Dirve Current **150 mA**

Measurement Current **150 mA**

No.	CCT (K)							
	0 h	500 h	1 000 h	2 000 h	3 000 h	4 000 h	5 000 h	6 000 h
1	2 678	2 678	2 687	2 688	2 689	2 690	2 693	2 693
2	2 607	2 609	2 615	2 612	2 611	2 612	2 616	2 616
3	2 679	2 682	2 684	2 684	2 684	2 685	2 690	2 689
4	2 659	2 664	2 667	2 673	2 673	2 674	2 676	2 678
5	2 646	2 649	2 648	2 655	2 655	2 656	2 659	2 661
6	2 731	2 734	2 743	2 743	2 742	2 741	2 744	2 748
7	2 688	2 696	2 704	2 708	2 708	2 711	2 714	2 714
8	2 672	2 673	2 677	2 678	2 678	2 677	2 679	2 682
9	2 735	2 747	2 748	2 746	2 746	2 751	2 755	2 753
10	2 639	2 645	2 650	2 649	2 650	2 650	2 653	2 655
11	2 648	2 650	2 653	2 655	2 653	2 656	2 660	2 661
12	2 692	2 696	2 696	2 697	2 699	2 702	2 703	2 704
13	2 641	2 643	2 648	2 649	2 654	2 653	2 656	2 656
14	2 673	2 672	2 690	2 690	2 691	2 690	2 695	2 695
15	2 636	2 639	2 641	2 643	2 643	2 643	2 648	2 647
16	2 618	2 620	2 623	2 629	2 639	2 644	2 645	2 646
17	2 686	2 688	2 689	2 700	2 704	2 704	2 707	2 708
18	2 756	2 768	2 768	2 768	2 768	2 770	2 775	2 774
19	2 645	2 647	2 653	2 655	2 654	2 657	2 663	2 661
20	2 655	2 653	2 659	2 661	2 662	2 664	2 670	2 668
Mean	2 669	2 673	2 677	2 679	2 680	2 681	2 685	2 686
Median	2 666	2 668	2 672	2 676	2 675	2 675	2 678	2 680
std.dev	39	41	41	40	40	40	40	40
Max	2 756	2 768	2 768	2 768	2 768	2 770	2 775	2 774
Min	2 607	2 609	2 615	2 612	2 611	2 612	2 616	2 616

This report may not be reproduced except in full
without permission of Samsung Electronics

SAMSUNG ELECTRONICS LED BUSINESS
1, Samsung-ro, Giheung-gu, Yongin-si,
Gyeonggi-do 17113, Korea

9.2 Test condition 2 **85 ℃**

Dirve Current **150 mA**

Measurement Current **150 mA**

No.	CCT (K)								
	7 000 h	8 000 h	9 000 h	10 000 h	11 000 h	12 000 h	13 000 h	14 000 h	15 000 h
1	2 693	2 696	2 695						
2	2 617	2 620	2 622						
3	2 689	2 692	2 691						
4	2 679	2 680	2 680						
5	2 660	2 661	2 669						
6	2 746	2 748	2 746						
7	2 714	2 717	2 723						
8	2 683	2 684	2 684						
9	2 755	2 755	2 765						
10	2 654	2 655	2 656						
11	2 660	2 660	2 662						
12	2 705	2 708	2 710						
13	2 655	2 658	2 658						
14	2 696	2 695	2 699						
15	2 648	2 650	2 650						
16	2 646	2 648	2 649						
17	2 708	2 710	2 710						
18	2 774	2 776	2 775						
19	2 664	2 670	2 674						
20	2 672	2 671	2 672						
Mean	2 686	2 688	2 689						
Median	2 681	2 682	2 682						
std.dev	40	39	40						
Max	2 774	2 776	2 775						
Min	2 617	2 620	2 622						

This report may not be reproduced except in full
without permission of Samsung Electronics

SAMSUNG ELECTRONICS LED BUSINESS
1, Samsung-ro, Giheung-gu, Yongin-si,
Gyeonggi-do 17113, Korea

9.3 Test condition 3 **105 ℃**

Dirve Current **150 mA**

Measurement Current **150 mA**

No.	Flux (lm)	Vf (V)	Lumen Maintenance (%)						
	0 h		500 h	1 000 h	2 000 h	3 000 h	4 000 h	5 000 h	6 000 h
1	65.2	3.013	100.0	99.9	98.2	97.1	96.4	95.8	95.2
2	63.8	3.031	100.4	99.8	99.1	97.9	97.2	96.7	96.0
3	65.6	3.003	99.3	99.0	98.2	96.9	96.1	95.5	95.0
4	63.7	3.015	100.3	99.8	98.6	97.6	96.9	96.1	95.6
5	64.7	3.011	98.5	98.2	97.0	96.1	95.5	94.9	94.5
6	65.0	3.006	99.1	98.7	97.5	96.5	95.9	95.2	94.6
7	65.5	3.005	99.4	99.4	97.7	97.0	96.6	96.1	95.6
8	64.7	2.999	100.3	99.0	98.1	97.2	96.5	95.9	95.4
9	64.8	3.013	100.2	98.5	97.5	96.9	96.1	95.7	95.2
10	64.7	3.011	100.0	99.5	98.5	97.5	96.9	96.1	95.7
11	63.6	3.028	100.3	99.8	99.0	97.9	97.3	96.6	96.0
12	65.2	3.013	100.4	99.4	98.4	97.5	96.8	96.2	95.7
13	64.9	3.030	100.5	99.8	99.2	98.4	97.8	97.2	96.8
14	65.3	3.008	100.4	99.8	99.3	98.2	97.5	97.1	96.5
15	64.3	3.013	100.1	99.7	98.6	97.6	96.9	96.2	95.7
16	64.4	3.018	100.2	99.4	98.2	97.3	96.4	95.8	95.4
17	64.3	3.012	100.1	99.2	98.2	97.4	96.8	96.3	95.8
18	64.1	3.013	100.2	99.7	98.8	97.8	97.2	96.5	96.0
19	63.4	3.007	100.3	99.9	99.0	97.9	97.0	96.7	96.2
20	62.4	3.019	100.5	99.9	99.1	97.5	96.7	96.1	95.8
Mean	64.5	3.01	100.0	99.4	98.4	97.4	96.7	96.1	95.6
Median	64.7	3.01	100.2	99.6	98.5	97.5	96.8	96.1	95.7
std.dev	0.8	0.01	0.5	0.5	0.6	0.6	0.6	0.6	0.6
Max	65.6	3.03	100.5	99.9	99.3	98.4	97.8	97.2	96.8
Min	62.4	3.00	98.5	98.2	97.0	96.1	95.5	94.9	94.5

This report may not be reproduced except in full
without permission of Samsung Electronics

SAMSUNG ELECTRONICS LED BUSINESS
1, Samsung-ro, Giheung-gu, Yongin-si,
Gyeonggi-do 17113, Korea

9.3 Test condition 3 **105 ℃**

Dirve Current **150 mA**

Measurement Current **150 mA**

No.	Lumen Maintenance (%)								
	7 000 h	8 000 h	9 000 h	10 000 h	11 000 h	12 000 h	13 000 h	14 000 h	15 000 h
1	94.7	94.2	93.8						
2	95.5	95.0	94.6						
3	94.4	93.9	93.5						
4	95.1	94.6	94.3						
5	93.9	93.4	93.0						
6	94.1	93.7	93.3						
7	95.1	94.5	94.2						
8	95.0	94.5	94.2						
9	94.8	94.5	94.1						
10	95.1	94.7	94.3						
11	95.5	95.0	94.6						
12	95.4	94.9	94.6						
13	96.2	95.7	95.4						
14	96.1	95.4	95.1						
15	95.2	94.9	94.5						
16	94.7	94.5	94.1						
17	95.4	95.0	94.6						
18	95.5	95.2	94.8						
19	95.7	95.4	95.0						
20	95.3	94.9	94.6						
Mean	95.1	94.7	94.3						
Median	95.2	94.8	94.4						
std.dev	0.6	0.6	0.6						
Max	96.2	95.7	95.4						
Min	93.9	93.4	93.0						

This report may not be reproduced except in full
without permission of Samsung Electronics

SAMSUNG ELECTRONICS LED BUSINESS
1, Samsung-ro, Giheung-gu, Yongin-si,
Gyeonggi-do 17113, Korea

9.3 Test condition 3 **105 ℃**

Dirve Current **150 mA**

Measurement Current **150 mA**

No.	Cx	Cy	Chromaticity Shift (△u'v')						
	0 h		500 h	1 000 h	2 000 h	3 000 h	4 000 h	5 000 h	6 000 h
1	0.463 4	0.412 4	0.000 2	0.000 3	0.000 8	0.000 9	0.001 0	0.001 3	0.001 4
2	0.463 3	0.410 9	0.000 2	0.000 2	0.000 5	0.000 5	0.000 7	0.000 9	0.001 1
3	0.462 3	0.414 6	0.000 6	0.000 9	0.000 9	0.001 2	0.001 3	0.001 5	0.001 7
4	0.461 6	0.409 9	0.000 4	0.000 7	0.001 0	0.000 9	0.001 2	0.001 3	0.001 4
5	0.456 2	0.405 5	0.000 9	0.001 1	0.001 3	0.001 6	0.001 6	0.001 7	0.001 8
6	0.464 9	0.413 5	0.000 9	0.001 2	0.001 8	0.001 8	0.002 0	0.002 1	0.002 3
7	0.463 1	0.414 0	0.001 2	0.001 0	0.001 7	0.001 6	0.001 5	0.001 6	0.001 7
8	0.467 4	0.413 3	0.000 2	0.001 2	0.001 4	0.001 5	0.001 5	0.001 8	0.001 9
9	0.459 3	0.408 4	0.000 4	0.002 0	0.001 3	0.001 3	0.001 5	0.001 7	0.001 6
10	0.460 8	0.409 5	0.000 4	0.000 7	0.001 1	0.001 2	0.001 3	0.001 6	0.001 6
11	0.449 8	0.400 0	0.000 4	0.000 3	0.000 5	0.000 6	0.000 8	0.000 9	0.001 0
12	0.462 9	0.413 1	0.000 3	0.000 6	0.000 8	0.000 9	0.000 9	0.001 1	0.001 3
13	0.461 6	0.411 9	0.000 2	0.000 2	0.000 4	0.000 5	0.000 5	0.000 7	0.000 7
14	0.453 9	0.405 5	0.000 2	0.000 2	0.000 3	0.000 4	0.000 5	0.000 7	0.000 8
15	0.455 8	0.404 9	0.000 2	0.000 5	0.000 7	0.000 8	0.000 9	0.001 1	0.001 2
16	0.454 8	0.401 6	0.000 3	0.000 8	0.001 1	0.001 2	0.001 3	0.001 6	0.001 6
17	0.464 0	0.410 8	0.000 3	0.001 0	0.001 1	0.001 2	0.001 3	0.001 6	0.001 6
18	0.463 5	0.411 3	0.000 5	0.000 8	0.000 9	0.001 0	0.001 1	0.001 4	0.001 5
19	0.451 6	0.399 6	0.000 2	0.000 2	0.000 4	0.000 5	0.000 6	0.000 8	0.000 9
20	0.458 9	0.406 3	0.000 3	0.000 3	0.000 5	0.000 7	0.000 9	0.001 2	0.001 2
Mean	0.460 0	0.408 9	0.000 4	0.000 7	0.000 9	0.001 0	0.001 1	0.001 3	0.001 4
Median	0.461 6	0.410 4	0.000 3	0.000 7	0.000 9	0.000 9	0.001 1	0.001 3	0.001 4
std.dev	0.004 8	0.004 7	0.000 3	0.000 5	0.000 4	0.000 4	0.000 4	0.000 4	0.000 4
Max	0.467 4	0.414 6	0.001 2	0.002 0	0.001 8	0.001 8	0.002 0	0.002 1	0.002 3
Min	0.449 8	0.399 6	0.000 2	0.000 2	0.000 3	0.000 4	0.000 5	0.000 7	0.000 7

This report may not be reproduced except in full
without permission of Samsung Electronics

SAMSUNG ELECTRONICS LED BUSINESS
1, Samsung-ro, Giheung-gu, Yongin-si,
Gyeonggi-do 17113, Korea

9.3 Test condition 3 **105 ℃**

Dirve Current **150 mA**

Measurement Current **150 mA**

No.	Chromaticity Shift (△u'v')								
	7 000 h	8 000 h	9 000 h	10 000 h	11 000 h	12 000 h	13 000 h	14 000 h	15 000 h
1	0.001 5	0.001 8	0.001 8						
2	0.001 2	0.001 4	0.001 4						
3	0.001 8	0.001 9	0.001 9						
4	0.001 4	0.001 6	0.001 6						
5	0.001 8	0.002 1	0.002 1						
6	0.002 2	0.002 5	0.002 5						
7	0.001 8	0.002 0	0.002 0						
8	0.001 9	0.002 1	0.002 1						
9	0.001 8	0.001 8	0.001 8						
10	0.001 7	0.001 9	0.001 9						
11	0.001 1	0.001 4	0.001 4						
12	0.001 3	0.001 4	0.001 4						
13	0.000 8	0.001 1	0.001 1						
14	0.000 9	0.001 0	0.001 0						
15	0.001 2	0.001 4	0.001 4						
16	0.001 8	0.002 0	0.002 0						
17	0.001 6	0.001 9	0.001 9						
18	0.001 6	0.001 8	0.001 8						
19	0.000 9	0.001 1	0.001 1						
20	0.001 3	0.001 5	0.001 5						
Mean	0.001 5	0.001 7	0.001 7						
Median	0.001 6	0.001 8	0.001 8						
std.dev	0.000 4	0.000 4	0.000 4						
Max	0.002 2	0.002 5	0.002 5						
Min	0.000 8	0.001 0	0.001 0						

This report may not be reproduced except in full
without permission of Samsung Electronics

SAMSUNG ELECTRONICS LED BUSINESS
1, Samsung-ro, Giheung-gu, Yongin-si,
Gyeonggi-do 17113, Korea

9.3 Test condition 3 **105 ℃**

Dirve Current **150 mA**

Measurement Current **150 mA**

No.	CCT (K)							
	0 h	500 h	1 000 h	2 000 h	3 000 h	4 000 h	5 000 h	6 000 h
1	2 659	2 661	2 663	2 676	2 678	2 681	2 686	2 689
2	2 649	2 649	2 653	2 658	2 660	2 663	2 669	2 671
3	2 693	2 706	2 712	2 712	2 720	2 721	2 726	2 729
4	2 664	2 673	2 679	2 684	2 682	2 689	2 692	2 694
5	2 706	2 727	2 730	2 735	2 740	2 742	2 743	2 746
6	2 647	2 666	2 672	2 683	2 683	2 688	2 692	2 695
7	2 676	2 701	2 698	2 711	2 709	2 709	2 711	2 713
8	2 611	2 612	2 637	2 640	2 643	2 643	2 649	2 650
9	2 685	2 693	2 728	2 713	2 712	2 717	2 722	2 721
10	2 673	2 681	2 687	2 697	2 697	2 701	2 707	2 707
11	2 757	2 763	2 763	2 767	2 771	2 774	2 778	2 781
12	2 671	2 671	2 683	2 687	2 689	2 691	2 695	2 698
13	2 680	2 681	2 684	2 688	2 690	2 691	2 694	2 695
14	2 741	2 743	2 743	2 748	2 749	2 752	2 756	2 760
15	2 707	2 710	2 718	2 722	2 724	2 726	2 732	2 734
16	2 694	2 699	2 711	2 718	2 721	2 723	2 729	2 730
17	2 637	2 641	2 658	2 661	2 662	2 665	2 671	2 671
18	2 648	2 659	2 666	2 668	2 669	2 671	2 678	2 680
19	2 726	2 725	2 731	2 734	2 736	2 739	2 745	2 747
20	2 673	2 675	2 680	2 684	2 689	2 692	2 699	2 700
Mean	2 680	2 687	2 695	2 699	2 701	2 704	2 709	2 711
Median	2 675	2 681	2 686	2 693	2 694	2 697	2 703	2 704
std.dev	36	36	34	32	33	33	32	33
Max	2 757	2 763	2 763	2 767	2 771	2 774	2 778	2 781
Min	2 611	2 612	2 637	2 640	2 643	2 643	2 649	2 650

This report may not be reproduced except in full
without permission of Samsung Electronics

SAMSUNG ELECTRONICS LED BUSINESS
1, Samsung-ro, Giheung-gu, Yongin-si,
Gyeonggi-do 17113, Korea

9.3 Test condition 3 **105 ℃**

Dirve Current **150 mA**

Measurement Current **150 mA**

No.	CCT (K)								
	7 000 h	8 000 h	9 000 h	10 000 h	11 000 h	12 000 h	13 000 h	14 000 h	15 000 h
1	2 692	2 696	2 696						
2	2 673	2 677	2 677						
3	2 731	2 734	2 734						
4	2 694	2 699	2 699						
5	2 748	2 753	2 753						
6	2 694	2 699	2 699						
7	2 716	2 719	2 719						
8	2 651	2 655	2 655						
9	2 724	2 726	2 726						
10	2 711	2 714	2 714						
11	2 782	2 788	2 788						
12	2 700	2 701	2 701						
13	2 697	2 703	2 703						
14	2 761	2 765	2 765						
15	2 734	2 739	2 739						
16	2 734	2 740	2 740						
17	2 672	2 677	2 677						
18	2 682	2 687	2 687						
19	2 747	2 752	2 752						
20	2 703	2 706	2 706						
Mean	2 712	2 717	2 717						
Median	2 707	2 710	2 710						
std.dev	33	33	33						
Max	2 782	2 788	2 788						
Min	2 651	2 655	2 655						

This report may not be reproduced except in full
without permission of Samsung Electronics

SAMSUNG ELECTRONICS LED BUSINESS
1, Samsung-ro, Giheung-gu, Yongin-si,
Gyeonggi-do 17113, Korea

9.4 Chart

<Lumen Maintenance>

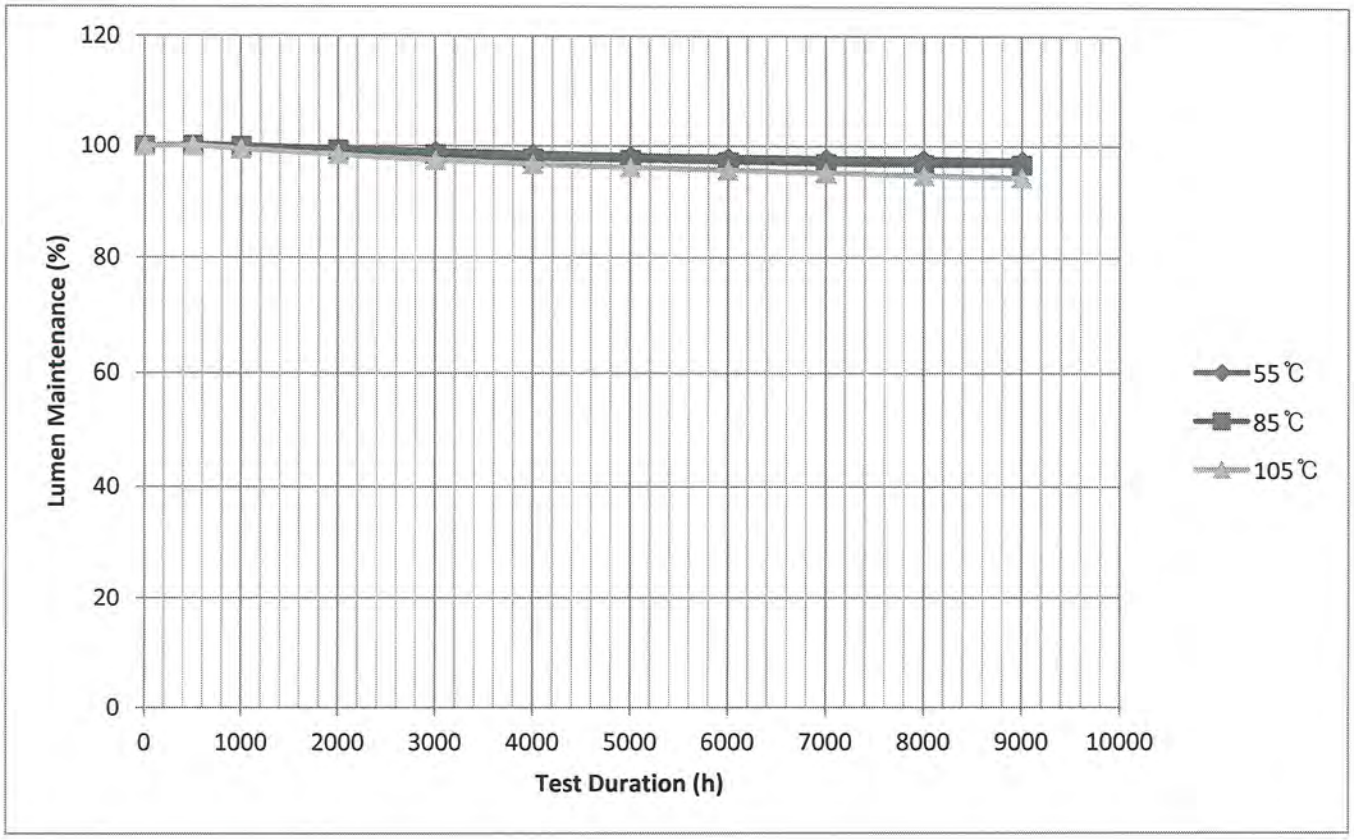

<Chromaticity Shift>

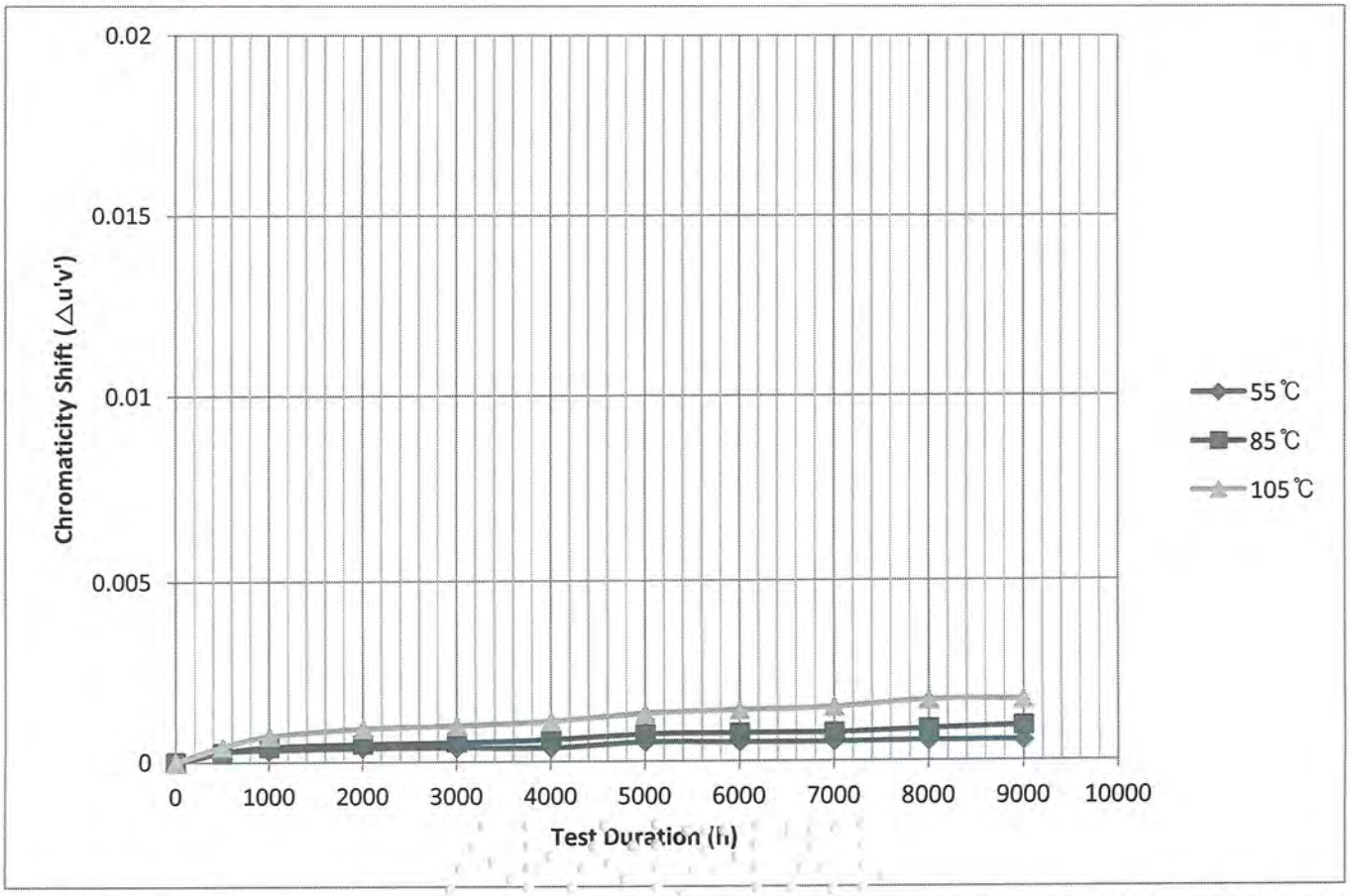

This report may not be reproduced except in full
without permission of Samsung Electronics

SAMSUNG ELECTRONICS LED BUSINESS
1, Samsung-ro, Giheung-gu, Yongin-si,
Gyeonggi-do 17113, Korea

<CCT>

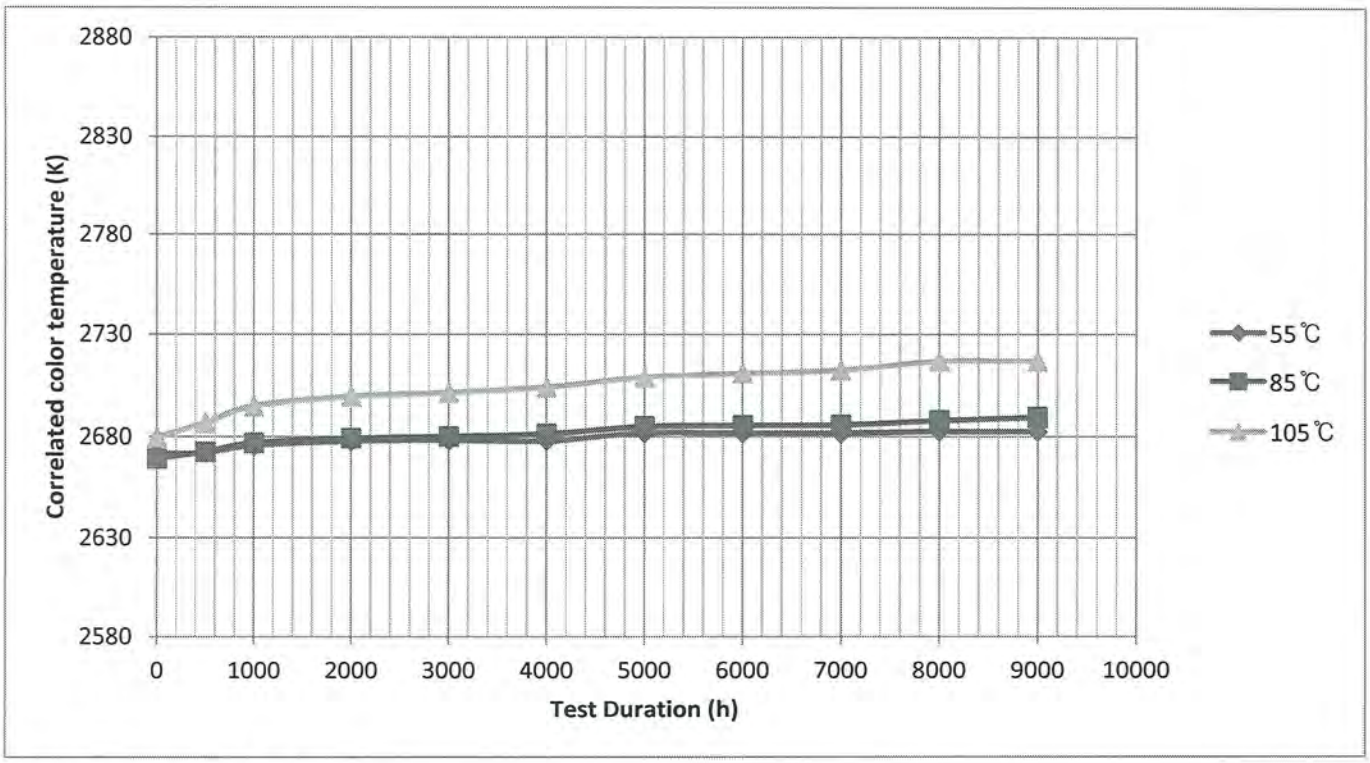

10. Observation of failures

No optical, Electrical or mechanical failure of any LED Package was seen during the lifetime testing.

11. LED light source monitoring interval

0 500 1 000 2 000 3 000 4 000 5 000 6 000 7 000 8 000 9 000

12. Photometric measurement uncertainty

3.5%

13. TM-21-11 Report : Projecting Long Term Lumen Maintenance of LED Light Source

Table 1: Report at each LM-80 Test Condition					
Description of LED Light Source Tested (manufacturer, model, catalog number)					
Test Condition 1 - 55°C Case Temp		Test Condition 2 - 85°C Case Temp		Test Condition 3 - 105°C Case Temp	
Sample size	20	Sample size	20	Sample size	20
Number of failures	0	Number of failures	0	Number of failures	0
DUT drive current used in the test (mA)	150	DUT drive current used in the test (mA)	150	DUT drive current used in the test (mA)	150
Test duration (hours)	9,000	Test duration (hours)	9,000	Test duration (hours)	9,000
Test duration used for projection (hour to hour)	4,000 - 9,000	Test duration used for projection (hour to hour)	4,000 - 9,000	Test duration used for projection (hour to hour)	4,000 - 9,000
Tested case temperature (°C)	55	Tested case temperature (°C)	85	Tested case temperature (°C)	105
α	2.331E-06	α	2.558E-06	α	4.998E-06
B	0.995	B	0.987	B	0.986
Reported L70(9k) (hours)	>54000	Reported L70(9k) (hours)	>54000	Reported L70(9k) (hours)	>54000

This report may not be reproduced except in full
without permission of Samsung Electronics

SAMSUNG ELECTRONICS LED BUSINESS
1, Samsung-ro, Giheung-gu, Yongin-si,
Gyeonggi-do 17113, Korea

14. Dimension of samples

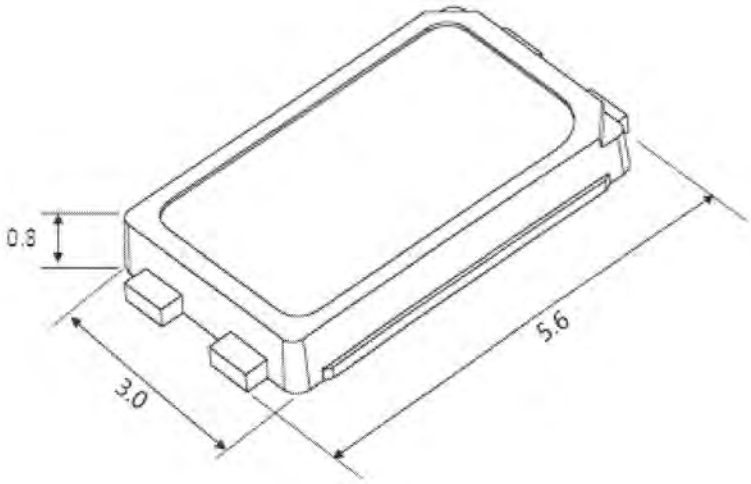

**********END OF TEST REPORT**********

This report may not be reproduced except in full
without permission of Samsung Electronics

SAMSUNG ELECTRONICS LED BUSINESS
1, Samsung-ro, Giheung-gu, Yongin-si,
Gyeonggi-do 17113, Korea