LM80 Test Report

IES LM-80-08 Approved Method for Measuring Lumen Maintenance of LED Light Sources

Samsung Electronics LED Business Report

Report No. : SLED-19-028-R01
Test Initiated Date : 2015.02.13
Test End Date : 2017.03.28
Report Issued Date : 2019.05.31
Report Revised Date : 2019.11.13

Test result reported for	Testing performed by
SAMSUNG ELECTRONICS LED BUSINESS Lighting Marketing Group	**SAMSUNG ELECTRONICS LED BUSINESS** 1, Samsung-ro, Giheung-gu, Yongin-si, Gyeonggi-do 17113, Korea e-mail) kwon.sc@samsung.com
Tested By KyungYeup Kwak	**Approved by DooSung Park**
Test Personal Name & Signatory	**Approval Name & Signatory**

SAMSUNG ELECTRONICS LED BUSINESS Executive Vice President
Accredited by KOLAS, Republic of KOREA

The above testing certificate is the accredited testing items by Korea Laboratory Accreditation Scheme, which signed the ILAC-MRA.

※ If you need confirmation about the authenticity of the test report, please contact the above contact information.

This report may not be reproduced except in full
without permission of Samsung Electronics

■ Revision History ■

Data	Revision History	Writer	
		Drawn	Approved
2019.05.31	New Version(13kh)	K.Y.KWAK	D.S.PARK
2019.11.13	Extended Evaluation Time(17kh)	K.Y.KWAK	D.S.PARK

■ Test Summary ■

Life test condition			Summary of result		
Test condition	Current (mA)	Case temperature (℃)	Test duration (h)	Average lumen maintenance (%)	Maximum chromaticity shift (△u'v')
1	700	54.8	17 000	97.7	0.001 3
2	700	85.0	17 000	97.3	0.001 4
3	700	104.7	17 000	97.0	0.002 2

1. Number of LED light sources tested

1) Sample size
- 20 Packages tested at actual case temperature 54.8 ℃
- 20 Packages tested at actual case temperature 85.0 ℃
- 20 Packages tested at actual case temperature 104.7 ℃

2) Sampling method
- Minimum three manufacturing lots with each manufacturing lot built from different wafer lots built on non-consecutive days.

2. Description of LED light sources

- Tested model code : SPHWH2L3D30CD4V***
- Sample manufacturer : Samsung Electronics
- Sample Type : LED Package
- Package dimension : (3.5 × 3.5) ㎜
- Minimum die spacing : -
- CCT / CRI (Nominal) : 3 000 K / 70

3. Description of auxiliary equipment

1) Instrument Integrating sphere ISP1000-100
2) Instrument CAS140-CT
3) Keithley 2425 Sourcemeter

This report may not be reproduced except in full
without permission of Samsung Electronics

SAMSUNG ELECTRONICS LED BUSINESS
1, Samsung-ro, Giheung-gu, Yongin-si,
Gyeonggi-do 17113, Korea

4. Operating time

1) Electrical condition

- Drive current : 700 ㎃
- Typical voltage : 2.97 V
- Total input power : 2.08 W
- Average current density per LED die : 326 ㎃/㎟
- Average power density per LED die : 0.97 W/㎟

* LED packages are driven with a constant direct current.

2) Test duration

- 17 000 h

5. Ambient conditions including airflow, temperature and relative humidity

The minimal airflow is maintained in chamber.

The ambient temperature around the LED packages inside chamber is controlled by air flowing and the thermocouple readings are monitored.

- Case temperature : Contorlled to -2 ℃
- Surrounding air temperature : Contorlled to -5 ℃
- Relative humidity : < 65 % R.H.

6. Case temperature (Test point temperature)

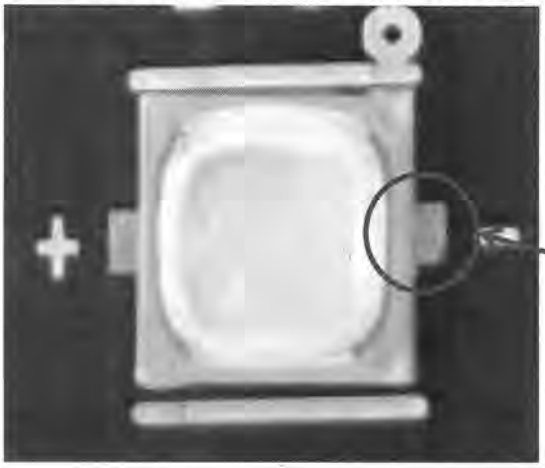

Case Temperature Measurement Point

7. Drive current of the LED light source during lifetime test

See Sub-clause 9.1, 9.2 and 9.3

8. Initial luminous flux and forward voltage

See the table

9. Lumen maintenance data for each individual LED light source

See the table

This report may not be reproduced except in full
without permission of Samsung Electronics

SAMSUNG ELECTRONICS LED BUSINESS
1, Samsung-ro, Giheung-gu, Yongin-si,
Gyeonggi-do 17113, Korea

9.1 Test condition 1 **55 ℃**

Drive Current **700 mA**

Measurement Current **700 mA**

No.	Flux (lm)	Vf (V)	Lumen Maintenance (%)						
	0 h		500 h	1 000 h	2 000 h	3 000 h	4 000 h	5 000 h	6 000 h
1	294.1	3.047	99.3	99.0	98.7	98.7	98.5	98.7	98.2
2	287.3	3.019	99.2	99.0	98.5	98.6	98.5	98.7	98.3
3	288.8	3.007	99.8	99.0	98.7	98.7	98.6	98.6	98.3
4	290.2	2.963	99.6	99.0	98.8	98.7	98.6	98.5	98.4
5	283.6	2.948	99.4	99.1	98.8	98.7	98.9	98.8	98.4
6	297.0	3.029	99.5	99.1	98.6	98.7	98.5	98.8	98.2
7	292.4	3.029	99.7	99.0	98.9	98.9	98.8	98.7	98.5
8	296.6	2.975	99.5	99.1	98.8	98.6	98.5	98.5	98.2
9	293.4	2.945	99.3	99.1	98.7	98.7	98.6	98.7	98.4
10	289.1	2.941	99.5	99.1	98.8	98.8	98.7	98.7	98.5
11	295.2	3.023	99.7	98.8	98.6	98.8	98.6	98.5	98.2
12	296.2	2.972	99.7	99.0	98.7	98.6	98.4	98.6	98.2
13	292.9	2.960	99.5	99.1	99.0	98.8	98.6	98.7	98.4
14	296.1	2.944	99.2	99.0	98.7	98.6	98.5	98.7	98.4
15	292.2	2.939	99.3	98.8	98.5	98.9	98.7	98.6	98.3
16	290.1	3.003	99.5	98.8	98.5	98.6	98.5	98.4	98.1
17	295.0	2.978	99.2	99.0	98.8	98.6	98.4	98.6	98.2
18	301.9	2.978	99.6	99.1	98.5	98.7	98.6	98.6	98.4
19	292.6	2.966	99.7	98.9	98.7	98.9	98.9	98.5	98.3
20	295.9	2.923	99.7	99.0	98.5	98.5	98.6	98.3	98.1
Mean	293.0	2.98	99.5	99.0	98.7	98.7	98.6	98.6	98.3
Median	293.2	2.97	99.5	99.0	98.7	98.7	98.6	98.6	98.3
std.dev	4.1	0.04	0.2	0.1	0.1	0.1	0.1	0.1	0.1
Max	301.9	3.05	99.8	99.1	99.0	98.9	98.9	98.8	98.5
Min	283.6	2.92	99.2	98.8	98.5	98.5	98.4	98.3	98.1

This report may not be reproduced except in full
without permission of Samsung Electronics

SAMSUNG ELECTRONICS LED BUSINESS
1, Samsung-ro, Giheung-gu, Yongin-si,
Gyeonggi-do 17113, Korea

9.1 Test condition 1 **55 ℃**

Drive Current **700 mA**

Measurement Current **700 mA**

No.	Lumen Maintenance (%)								
	7 000 h	8 000 h	9 000 h	10 000 h	11 000 h	12 000 h	13 000 h	14 000 h	15 000 h
1	98.4	98.2	98.4	98.5	98.4	98.2	98.2	98.1	98.0
2	98.3	98.2	98.0	98.2	98.1	98.0	98.1	97.9	97.8
3	98.6	98.5	98.3	98.2	98.1	98.0	98.2	98.0	97.9
4	98.5	98.3	98.2	97.9	97.8	97.9	98.0	97.9	97.6
5	98.6	98.5	98.4	98.5	98.1	98.1	98.2	98.0	97.9
6	98.2	98.1	98.0	98.1	98.1	97.9	98.1	97.8	97.8
7	98.7	98.6	98.4	98.5	98.3	98.2	98.4	98.2	98.1
8	98.3	98.3	98.0	98.1	98.0	97.9	98.0	97.8	97.7
9	98.2	98.2	97.9	98.0	97.9	97.9	98.0	97.7	97.6
10	98.4	98.3	98.2	98.2	98.2	97.9	98.0	97.9	97.8
11	98.3	98.3	98.1	98.1	97.9	97.9	98.0	97.8	97.6
12	98.4	98.4	98.3	98.2	98.2	98.2	98.3	98.1	98.0
13	98.3	98.1	98.5	98.3	98.2	97.9	98.1	97.9	97.8
14	98.5	98.3	98.3	98.4	98.3	98.3	98.4	98.3	98.1
15	98.5	98.6	98.0	98.2	98.0	97.9	98.1	97.9	97.8
16	98.2	98.2	98.1	98.1	98.0	97.9	98.0	97.8	97.8
17	98.4	98.3	98.2	98.3	98.3	98.2	98.3	98.1	98.0
18	98.5	98.3	98.3	98.2	98.2	98.1	98.2	98.1	97.9
19	98.1	98.0	97.9	98.0	97.9	97.8	98.0	97.9	97.6
20	98.2	98.2	98.2	98.1	98.1	98.0	98.1	98.0	97.8
Mean	98.4	98.3	98.2	98.2	98.1	98.0	98.1	98.0	97.8
Median	98.4	98.3	98.2	98.2	98.1	97.9	98.1	97.9	97.8
std.dev	0.2	0.2	0.2	0.2	0.2	0.1	0.1	0.2	0.2
Max	98.7	98.6	98.5	98.5	98.4	98.3	98.4	98.3	98.1
Min	98.1	98.0	97.9	97.9	97.8	97.8	98.0	97.7	97.6

This report may not be reproduced except in full
without permission of Samsung Electronics

SAMSUNG ELECTRONICS LED BUSINESS
1, Samsung-ro, Giheung-gu, Yongin-si,
Gyeonggi-do 17113, Korea

9.1 Test condition 1 **55 ℃**

Drive Current **700 mA**

Measurement Current **700 mA**

No.	Lumen Maintenance (%)								
	16 000 h	17 000 h	18 000 h	19 000 h	20 000 h	21 000 h	22 000 h	23 000 h	24 000 h
1	98.0	97.9							
2	97.8	97.7							
3	97.8	97.7							
4	97.5	97.4							
5	97.9	97.8							
6	97.8	97.6							
7	98.0	98.0							
8	97.6	97.5							
9	97.7	97.5							
10	97.7	97.5							
11	97.6	97.5							
12	98.1	97.9							
13	97.8	97.6							
14	98.0	97.8							
15	97.7	97.6							
16	97.8	97.6							
17	98.1	97.8							
18	97.9	97.8							
19	97.6	97.4							
20	97.8	97.7							
Mean	97.8	97.7							
Median	97.8	97.6							
std.dev	0.2	0.2							
Max	98.1	98.0							
Min	97.5	97.4							

This report may not be reproduced except in full
without permission of Samsung Electronics

SAMSUNG ELECTRONICS LED BUSINESS
1, Samsung-ro, Giheung-gu, Yongin-si,
Gyeonggi-do 17113, Korea

9.1 Test condition 1 **55 ℃**

Drive Current **700 mA**

Measurement Current **700 mA**

No.	Cx	Cy	Chromaticity Shift (△u'v')						
	0 h		500 h	1 000 h	2 000 h	3 000 h	4 000 h	5 000 h	6 000 h
1	0.432 1	0.403 5	0.000 1	0.000 1	0.000 0	0.000 0	0.000 1	0.000 2	0.000 2
2	0.432 6	0.403 4	0.000 0	0.000 1	0.000 1	0.000 2	0.000 2	0.000 3	0.000 3
3	0.434 7	0.407 1	0.000 1	0.000 0	0.000 1	0.000 1	0.000 1	0.000 2	0.000 4
4	0.433 4	0.405 0	0.000 1	0.000 1	0.000 1	0.000 1	0.000 2	0.000 3	0.000 4
5	0.434 4	0.406 4	0.000 0	0.000 0	0.000 0	0.000 1	0.000 1	0.000 2	0.000 3
6	0.429 7	0.403 3	0.000 1	0.000 0	0.000 0	0.000 1	0.000 2	0.000 2	0.000 2
7	0.427 8	0.396 1	0.000 1	0.000 0	0.000 0	0.000 0	0.000 0	0.000 1	0.000 2
8	0.439 0	0.408 8	0.000 1	0.000 0	0.000 0	0.000 1	0.000 2	0.000 2	0.000 4
9	0.442 7	0.410 8	0.000 1	0.000 2	0.000 1	0.000 1	0.000 2	0.000 3	0.000 4
10	0.440 6	0.408 5	0.000 0	0.000 0	0.000 1	0.000 1	0.000 2	0.000 3	0.000 3
11	0.430 3	0.403 1	0.000 0	0.000 0	0.000 1	0.000 1	0.000 1	0.000 3	0.000 2
12	0.436 0	0.401 8	0.000 1	0.000 1	0.000 1	0.000 1	0.000 2	0.000 3	0.000 3
13	0.437 6	0.406 4	0.000 0	0.000 0	0.000 1	0.000 0	0.000 1	0.000 2	0.000 2
14	0.430 4	0.405 1	0.000 1	0.000 2	0.000 1	0.000 2	0.000 3	0.000 4	0.000 4
15	0.435 8	0.404 8	0.000 1	0.000 0	0.000 2	0.000 2	0.000 2	0.000 3	0.000 4
16	0.436 0	0.405 8	0.000 1	0.000 1	0.000 0	0.000 1	0.000 1	0.000 2	0.000 2
17	0.435 2	0.404 4	0.000 1	0.000 0	0.000 0	0.000 1	0.000 1	0.000 2	0.000 3
18	0.436 0	0.405 0	0.000 1	0.000 1	0.000 1	0.000 1	0.000 2	0.000 2	0.000 3
19	0.435 0	0.403 3	0.000 1	0.000 0	0.000 0	0.000 0	0.000 2	0.000 3	0.000 4
20	0.433 0	0.406 4	0.000 1	0.000 1	0.000 1	0.000 1	0.000 1	0.000 2	0.000 2
Mean	0.434 6	0.404 9	0.000 1	0.000 1	0.000 1	0.000 1	0.000 2	0.000 2	0.000 3
Median	0.434 8	0.405 0	0.000 1	0.000 0	0.000 1	0.000 1	0.000 2	0.000 2	0.000 3
std.dev	0.003 7	0.003 0	0.000 0	0.000 1	0.000 0	0.000 1	0.000 1	0.000 1	0.000 1
Max	0.442 7	0.410 8	0.000 1	0.000 2	0.000 2	0.000 2	0.000 3	0.000 4	0.000 4
Min	0.427 8	0.396 1	0.000 0	0.000 0	0.000 0	0.000 0	0.000 0	0.000 1	0.000 2

This report may not be reproduced except in full
without permission of Samsung Electronics

SAMSUNG ELECTRONICS LED BUSINESS
1, Samsung-ro, Giheung-gu, Yongin-si,
Gyeonggi-do 17113, Korea

9.1 Test condition 1 **55 ℃**

Drive Current **700 mA**

Measurement Current **700 mA**

No.	Chromaticity Shift (△u'v')								
	7 000 h	8 000 h	9 000 h	10 000 h	11 000 h	12 000 h	13 000 h	14 000 h	15 000 h
1	0.000 3	0.000 3	0.000 4	0.000 4	0.000 4	0.000 6	0.000 6	0.000 7	0.000 7
2	0.000 4	0.000 4	0.000 4	0.000 6	0.000 7	0.000 8	0.000 9	0.000 9	0.001 0
3	0.000 4	0.000 4	0.000 5	0.000 5	0.000 5	0.000 6	0.000 7	0.000 8	0.000 8
4	0.000 4	0.000 5	0.000 5	0.000 6	0.000 6	0.000 7	0.000 8	0.000 9	0.000 9
5	0.000 3	0.000 3	0.000 4	0.000 4	0.000 4	0.000 6	0.000 6	0.000 6	0.000 6
6	0.000 3	0.000 3	0.000 4	0.000 4	0.000 4	0.000 6	0.000 6	0.000 6	0.000 7
7	0.000 3	0.000 3	0.000 4	0.000 4	0.000 4	0.000 6	0.000 7	0.000 7	0.000 8
8	0.000 4	0.000 4	0.000 4	0.000 4	0.000 5	0.000 6	0.000 6	0.000 7	0.000 7
9	0.000 5	0.000 4	0.000 5	0.000 5	0.000 5	0.000 6	0.000 7	0.000 7	0.000 8
10	0.000 3	0.000 4	0.000 4	0.000 5	0.000 6	0.000 8	0.000 9	0.000 9	0.001 0
11	0.000 4	0.000 4	0.000 4	0.000 5	0.000 4	0.000 6	0.000 8	0.000 7	0.000 8
12	0.000 4	0.000 4	0.000 5	0.000 5	0.000 4	0.000 6	0.000 7	0.000 7	0.000 7
13	0.000 3	0.000 2	0.000 3	0.000 6	0.000 5	0.000 7	0.000 9	0.000 8	0.000 9
14	0.000 5	0.000 5	0.000 6	0.000 6	0.000 6	0.000 8	0.000 8	0.000 9	0.000 9
15	0.000 4	0.000 6	0.000 7	0.000 9	0.001 1	0.001 2	0.001 3	0.001 3	0.001 5
16	0.000 4	0.000 3	0.000 4	0.000 6	0.000 5	0.000 7	0.000 8	0.000 8	0.000 9
17	0.000 4	0.000 4	0.000 4	0.000 8	0.000 8	0.001 0	0.001 2	0.001 1	0.001 3
18	0.000 4	0.000 3	0.000 4	0.000 6	0.000 5	0.000 7	0.000 6	0.000 7	0.000 7
19	0.000 5	0.000 4	0.000 4	0.000 4	0.000 5	0.000 7	0.000 7	0.000 7	0.000 7
20	0.000 2	0.000 3	0.000 3	0.000 4	0.000 3	0.000 4	0.000 5	0.000 5	0.000 5
Mean	0.000 4	0.000 4	0.000 4	0.000 5	0.000 5	0.000 7	0.000 8	0.000 8	0.000 8
Median	0.000 4	0.000 4	0.000 4	0.000 5	0.000 5	0.000 6	0.000 7	0.000 7	0.000 8
std.dev	0.000 1	0.000 1	0.000 1	0.000 1	0.000 2	0.000 2	0.000 2	0.000 2	0.000 2
Max	0.000 5	0.000 6	0.000 7	0.000 9	0.001 1	0.001 2	0.001 3	0.001 3	0.001 5
Min	0.000 2	0.000 2	0.000 3	0.000 4	0.000 3	0.000 4	0.000 5	0.000 5	0.000 5

This report may not be reproduced except in full
without permission of Samsung Electronics

SAMSUNG ELECTRONICS LED BUSINESS
1, Samsung-ro, Giheung-gu, Yongin-si,
Gyeonggi-do 17113, Korea

9.1 Test condition 1 **55 ℃**

Drive Current **700 mA**

Measurement Current **700 mA**

No.	Chromaticity Shift (△u'v')								
	16 000 h	17 000 h	18 000 h	19 000 h	20 000 h	21 000 h	22 000 h	23 000 h	24 000 h
1	0.000 6	0.000 6							
2	0.000 9	0.000 9							
3	0.000 7	0.000 7							
4	0.000 9	0.000 9							
5	0.000 6	0.000 5							
6	0.000 6	0.000 6							
7	0.000 7	0.000 7							
8	0.000 6	0.000 6							
9	0.000 7	0.000 7							
10	0.000 9	0.000 9							
11	0.000 7	0.000 7							
12	0.000 6	0.000 6							
13	0.000 9	0.000 9							
14	0.000 8	0.000 8							
15	0.001 5	0.001 3							
16	0.000 8	0.000 8							
17	0.001 3	0.001 3							
18	0.000 7	0.000 6							
19	0.000 7	0.000 6							
20	0.000 4	0.000 3							
Mean	0.000 8	0.000 7							
Median	0.000 7	0.000 7							
std.dev	0.000 3	0.000 2							
Max	0.001 5	0.001 3							
Min	0.000 4	0.000 3							

This report may not be reproduced except in full
without permission of Samsung Electronics

SAMSUNG ELECTRONICS LED BUSINESS
1, Samsung-ro, Giheung-gu, Yongin-si,
Gyeonggi-do 17113, Korea

9.1 Test condition 1 **55 ℃**

Drive Current **700 mA**

Measurement Current **700 mA**

No.	CCT (K)							
	0 h	500 h	1 000 h	2 000 h	3 000 h	4 000 h	5 000 h	6 000 h
1	3 081	3 082	3 082	3 081	3 081	3 082	3 085	3 085
2	3 072	3 072	3 072	3 075	3 075	3 077	3 079	3 081
3	3 066	3 065	3 067	3 067	3 067	3 068	3 072	3 074
4	3 071	3 071	3 072	3 071	3 072	3 074	3 076	3 076
5	3 065	3 066	3 066	3 066	3 068	3 069	3 071	3 072
6	3 123	3 124	3 123	3 123	3 125	3 126	3 127	3 129
7	3 099	3 099	3 099	3 099	3 099	3 099	3 101	3 102
8	3 006	3 008	3 007	3 006	3 009	3 010	3 011	3 014
9	2 961	2 963	2 965	2 964	2 964	2 967	2 968	2 971
10	2 977	2 978	2 977	2 977	2 978	2 979	2 981	2 981
11	3 111	3 111	3 112	3 112	3 113	3 113	3 115	3 115
12	2 999	3 001	3 001	3 001	3 001	3 003	3 006	3 007
13	3 011	3 011	3 012	3 011	3 011	3 013	3 015	3 015
14	3 125	3 128	3 130	3 128	3 130	3 132	3 135	3 135
15	3 027	3 026	3 028	3 031	3 031	3 031	3 033	3 033
16	3 033	3 033	3 035	3 034	3 034	3 036	3 037	3 038
17	3 035	3 035	3 036	3 036	3 036	3 038	3 039	3 040
18	3 027	3 028	3 027	3 028	3 028	3 030	3 031	3 032
19	3 030	3 031	3 031	3 031	3 030	3 035	3 036	3 039
20	3 090	3 090	3 089	3 090	3 092	3 092	3 094	3 095
Mean	3 050	3 051	3 052	3 052	3 052	3 054	3 056	3 057
Median	3 050	3 050	3 051	3 051	3 052	3 053	3 055	3 056
std.dev	47	47	47	47	47	47	47	47
Max	3 125	3 128	3 130	3 128	3 130	3 132	3 135	3 135
Min	2 961	2 963	2 965	2 964	2 964	2 967	2 968	2 971

This report may not be reproduced except in full
without permission of Samsung Electronics

SAMSUNG ELECTRONICS LED BUSINESS
1, Samsung-ro, Giheung-gu, Yongin-si,
Gyeonggi-do 17113, Korea

9.1 Test condition 1 **55 ℃**

Drive Current **700 mA**

Measurement Current **700 mA**

No.	CCT (K)								
	7 000 h	8 000 h	9 000 h	10 000 h	11 000 h	12 000 h	13 000 h	14 000 h	15 000 h
1	3 086	3 089	3 089	3 089	3 089	3 091	3 093	3 094	3 094
2	3 082	3 081	3 082	3 086	3 088	3 089	3 091	3 092	3 093
3	3 075	3 077	3 078	3 079	3 079	3 082	3 084	3 085	3 086
4	3 078	3 078	3 079	3 081	3 081	3 084	3 085	3 086	3 087
5	3 073	3 073	3 073	3 074	3 073	3 077	3 077	3 078	3 078
6	3 130	3 131	3 131	3 132	3 133	3 136	3 136	3 137	3 138
7	3 104	3 104	3 105	3 106	3 106	3 111	3 113	3 112	3 114
8	3 014	3 014	3 015	3 013	3 015	3 017	3 018	3 019	3 019
9	2 973	2 971	2 972	2 972	2 970	2 973	2 974	2 975	2 975
10	2 982	2 983	2 983	2 988	2 989	2 993	2 994	2 994	2 996
11	3 119	3 120	3 121	3 122	3 121	3 126	3 128	3 128	3 130
12	3 008	3 009	3 010	3 009	3 008	3 011	3 015	3 014	3 014
13	3 017	3 016	3 017	3 022	3 021	3 026	3 028	3 027	3 029
14	3 137	3 138	3 139	3 139	3 136	3 140	3 143	3 143	3 143
15	3 034	3 037	3 040	3 044	3 046	3 051	3 052	3 052	3 056
16	3 041	3 040	3 041	3 046	3 044	3 048	3 051	3 050	3 052
17	3 042	3 041	3 042	3 049	3 048	3 054	3 058	3 056	3 059
18	3 034	3 034	3 035	3 036	3 035	3 038	3 038	3 039	3 040
19	3 041	3 038	3 040	3 040	3 040	3 045	3 043	3 045	3 045
20	3 096	3 096	3 097	3 098	3 097	3 100	3 101	3 101	3 102
Mean	3 058	3 058	3 059	3 061	3 061	3 065	3 066	3 066	3 067
Median	3 057	3 057	3 058	3 061	3 061	3 065	3 067	3 067	3 068
std.dev	47	47	48	47	47	47	47	47	47
Max	3 137	3 138	3 139	3 139	3 136	3 140	3 143	3 143	3 143
Min	2 973	2 971	2 972	2 972	2 970	2 973	2 974	2 975	2 975

This report may not be reproduced except in full
without permission of Samsung Electronics

SAMSUNG ELECTRONICS LED BUSINESS
1, Samsung-ro, Giheung-gu, Yongin-si,
Gyeonggi-do 17113, Korea

9.1 Test condition 1 **55 ℃**

Drive Current **700 mA**

Measurement Current **700 mA**

No.	CCT (K)								
	16 000 h	17 000 h	18 000 h	19 000 h	20 000 h	21 000 h	22 000 h	23 000 h	24 000 h
1	3 091	3 090							
2	3 091	3 090							
3	3 083	3 082							
4	3 084	3 082							
5	3 075	3 073							
6	3 135	3 135							
7	3 112	3 110							
8	3 015	3 014							
9	2 971	2 970							
10	2 995	2 994							
11	3 127	3 127							
12	3 011	3 011							
13	3 028	3 027							
14	3 140	3 139							
15	3 055	3 049							
16	3 050	3 049							
17	3 059	3 058							
18	3 037	3 035							
19	3 043	3 041							
20	3 098	3 097							
Mean	3 065	3 064							
Median	3 067	3 066							
std.dev	47	47							
Max	3 140	3 139							
Min	2 971	2 970							

This report may not be reproduced except in full
without permission of Samsung Electronics

SAMSUNG ELECTRONICS LED BUSINESS
1, Samsung-ro, Giheung-gu, Yongin-si,
Gyeonggi-do 17113, Korea

9.2 Test condition 2 **85 ℃**

Drive Current **700 mA**

Measurement Current **700 mA**

No.	Flux (lm)	Vf (V)	Lumen Maintenance (%)						
	0 h		500 h	1 000 h	2 000 h	3 000 h	4 000 h	5 000 h	6 000 h
1	293.1	3.006	99.4	98.9	98.7	98.5	98.2	98.2	98.1
2	294.6	2.996	99.3	99.0	98.6	98.7	98.5	98.4	98.3
3	294.1	2.988	99.3	99.0	98.7	98.7	98.4	98.4	98.3
4	295.6	2.942	99.4	98.9	98.9	98.6	98.4	98.3	98.3
5	294.9	2.943	99.3	98.8	98.8	98.6	98.4	98.3	98.1
6	296.4	3.044	99.2	98.8	98.4	98.5	98.2	98.3	98.2
7	290.0	3.037	99.2	99.0	98.7	98.7	98.4	98.4	98.3
8	295.3	3.019	99.4	98.9	98.9	98.6	98.8	98.3	98.1
9	295.4	2.969	99.6	99.1	99.0	98.8	98.6	98.4	98.4
10	287.3	2.973	99.2	99.0	98.5	98.8	98.6	98.4	98.3
11	291.5	3.044	99.2	98.9	98.6	98.6	98.5	98.1	98.2
12	293.0	3.033	99.2	98.9	98.6	98.6	98.7	98.2	98.2
13	288.0	3.004	99.3	98.7	98.7	98.6	98.4	98.2	98.3
14	292.2	2.972	99.7	99.1	99.0	98.8	98.9	98.7	98.2
15	290.6	2.961	99.3	98.9	98.9	98.7	98.8	98.2	98.4
16	292.1	3.045	99.3	98.9	98.5	98.4	98.5	98.2	98.1
17	295.9	3.007	99.2	98.6	98.7	98.6	98.4	98.2	98.2
18	303.9	2.992	99.1	98.6	98.4	98.2	98.3	98.2	98.1
19	297.3	2.961	99.3	99.1	98.8	98.7	98.7	98.3	98.1
20	298.6	2.947	99.2	98.9	98.5	98.5	98.4	98.2	97.9
Mean	294.0	2.99	99.3	98.9	98.7	98.6	98.5	98.3	98.2
Median	294.4	2.99	99.3	98.9	98.7	98.6	98.5	98.3	98.2
std.dev	3.8	0.03	0.1	0.1	0.2	0.1	0.2	0.1	0.1
Max	303.9	3.04	99.7	99.1	99.0	98.8	98.9	98.7	98.4
Min	287.3	2.94	99.1	98.6	98.4	98.2	98.2	98.1	97.9

This report may not be reproduced except in full
without permission of Samsung Electronics

SAMSUNG ELECTRONICS LED BUSINESS
1, Samsung-ro, Giheung-gu, Yongin-si,
Gyeonggi-do 17113, Korea

9.2 Test condition 2 **85 ℃**

Drive Current **700 mA**

Measurement Current **700 mA**

No.	Lumen Maintenance (%)								
	7 000 h	8 000 h	9 000 h	10 000 h	11 000 h	12 000 h	13 000 h	14 000 h	15 000 h
1	97.8	97.7	98.0	97.9	97.7	97.8	97.6	97.6	97.6
2	98.3	98.3	98.2	98.1	98.0	98.0	98.0	98.0	97.9
3	98.0	98.0	98.0	98.1	98.0	98.1	98.0	97.9	98.0
4	98.3	98.1	98.0	98.0	97.9	98.0	98.0	97.9	97.9
5	98.0	98.0	98.0	97.8	97.8	97.8	97.7	97.6	97.6
6	97.7	97.7	97.9	97.7	97.6	97.7	97.7	97.6	97.5
7	98.0	98.0	98.0	98.2	97.9	98.0	98.0	97.9	97.9
8	98.3	98.1	98.1	97.9	97.8	97.8	97.7	97.6	97.7
9	98.0	98.3	98.2	98.0	98.0	98.1	98.0	97.9	97.9
10	97.8	97.9	98.3	98.0	98.0	98.0	97.8	97.8	97.8
11	97.7	97.7	97.7	97.7	97.6	97.7	97.6	97.4	97.5
12	97.8	97.8	97.6	97.6	97.6	97.7	97.8	97.7	97.7
13	97.9	97.7	97.8	97.4	97.4	97.5	97.5	97.3	97.3
14	98.2	98.0	98.1	97.9	97.5	97.7	97.6	97.4	97.3
15	98.2	97.9	97.7	97.6	97.5	97.7	97.5	97.4	97.2
16	98.1	97.8	97.5	97.6	97.5	97.6	97.4	97.3	97.3
17	97.9	98.0	97.8	97.9	97.7	97.9	97.7	97.7	97.8
18	97.8	97.5	97.8	97.6	97.6	97.6	97.5	97.4	97.4
19	98.1	98.0	97.8	97.5	97.6	97.6	97.6	97.5	97.4
20	97.9	97.7	97.4	97.4	97.4	97.6	97.3	97.3	97.2
Mean	98.0	97.9	97.9	97.8	97.7	97.8	97.7	97.6	97.6
Median	98.0	97.9	97.9	97.8	97.6	97.8	97.7	97.6	97.6
std.dev	0.2	0.2	0.2	0.2	0.2	0.2	0.2	0.2	0.3
Max	98.3	98.3	98.3	98.2	98.0	98.1	98.0	98.0	98.0
Min	97.7	97.5	97.4	97.4	97.4	97.5	97.3	97.3	97.2

This report may not be reproduced except in full
without permission of Samsung Electronics

SAMSUNG ELECTRONICS LED BUSINESS
1, Samsung-ro, Giheung-gu, Yongin-si,
Gyeonggi-do 17113, Korea

9.2 Test condition 2 **85 ℃**

Drive Current **700 mA**

Measurement Current **700 mA**

No.	Lumen Maintenance (%)								
	16 000 h	17 000 h	18 000 h	19 000 h	20 000 h	21 000 h	22 000 h	23 000 h	24 000 h
1	97.4	97.3							
2	97.8	97.7							
3	97.8	97.7							
4	97.8	97.7							
5	97.4	97.4							
6	97.4	97.4							
7	97.8	97.7							
8	97.4	97.3							
9	97.7	97.7							
10	97.7	97.6							
11	97.3	97.2							
12	97.6	97.4							
13	97.1	97.0							
14	97.1	96.9							
15	97.1	97.0							
16	97.1	97.0							
17	97.6	97.5							
18	97.3	97.2							
19	97.2	97.1							
20	97.1	97.0							
Mean	97.4	97.3							
Median	97.4	97.3							
std.dev	0.3	0.3							
Max	97.8	97.7							
Min	97.1	96.9							

This report may not be reproduced except in full
without permission of Samsung Electronics

SAMSUNG ELECTRONICS LED BUSINESS
1, Samsung-ro, Giheung-gu, Yongin-si,
Gyeonggi-do 17113, Korea

9.2 Test condition 2 **85 ℃**

Drive Current **700 mA**

Measurement Current **700 mA**

No.	Cx	Cy	Chromaticity Shift (△u'v')						
	0 h		500 h	1 000 h	2 000 h	3 000 h	4 000 h	5 000 h	6 000 h
1	0.439 1	0.407 3	0.000 1	0.000 1	0.000 1	0.000 1	0.000 2	0.000 3	0.000 4
2	0.435 5	0.401 1	0.000 1	0.000 1	0.000 1	0.000 1	0.000 2	0.000 2	0.000 3
3	0.434 3	0.407 4	0.000 1	0.000 1	0.000 1	0.000 1	0.000 2	0.000 2	0.000 4
4	0.438 8	0.407 9	0.000 1	0.000 0	0.000 0	0.000 1	0.000 1	0.000 2	0.000 3
5	0.438 9	0.408 3	0.000 1	0.000 1	0.000 2	0.000 1	0.000 2	0.000 3	0.000 4
6	0.434 1	0.404 8	0.000 0	0.000 1	0.000 1	0.000 1	0.000 1	0.000 1	0.000 2
7	0.437 7	0.404 6	0.000 1	0.000 0	0.000 0	0.000 1	0.000 2	0.000 2	0.000 3
8	0.435 5	0.405 9	0.000 1	0.000 0	0.000 0	0.000 1	0.000 1	0.000 2	0.000 3
9	0.432 7	0.405 8	0.000 1	0.000 1	0.000 1	0.000 1	0.000 1	0.000 2	0.000 3
10	0.434 9	0.407 6	0.000 1	0.000 1	0.000 1	0.000 1	0.000 2	0.000 2	0.000 3
11	0.430 5	0.402 7	0.000 0	0.000 0	0.000 0	0.000 1	0.000 1	0.000 2	0.000 3
12	0.440 3	0.408 3	0.000 0	0.000 0	0.000 2	0.000 1	0.000 1	0.000 2	0.000 3
13	0.430 9	0.404 3	0.000 0	0.000 0	0.000 1	0.000 0	0.000 1	0.000 1	0.000 3
14	0.433 1	0.403 6	0.000 1	0.000 1	0.000 1	0.000 1	0.000 1	0.000 1	0.000 2
15	0.429 1	0.404 5	0.000 1	0.000 0	0.000 1	0.000 1	0.000 1	0.000 2	0.000 3
16	0.433 1	0.402 2	0.000 0	0.000 1	0.000 0	0.000 1	0.000 1	0.000 2	0.000 2
17	0.431 4	0.399 3	0.000 0	0.000 0	0.000 1	0.000 1	0.000 2	0.000 2	0.000 4
18	0.434 3	0.405 9	0.000 1	0.000 1	0.000 1	0.000 1	0.000 1	0.000 1	0.000 3
19	0.435 5	0.405 6	0.000 1	0.000 0	0.000 1	0.000 2	0.000 2	0.000 2	0.000 4
20	0.434 5	0.406 9	0.000 1	0.000 1	0.000 0	0.000 1	0.000 1	0.000 2	0.000 3
Mean	0.434 7	0.405 2	0.000 1	0.000 1	0.000 1	0.000 1	0.000 1	0.000 2	0.000 3
Median	0.434 4	0.405 7	0.000 1	0.000 1	0.000 1	0.000 1	0.000 1	0.000 2	0.000 3
std.dev	0.003 1	0.002 5	0.000 0	0.000 0	0.000 0	0.000 0	0.000 1	0.000 1	0.000 1
Max	0.440 3	0.408 3	0.000 1	0.000 1	0.000 2	0.000 2	0.000 2	0.000 3	0.000 4
Min	0.429 1	0.399 3	0.000 0	0.000 0	0.000 0	0.000 0	0.000 1	0.000 1	0.000 2

This report may not be reproduced except in full
without permission of Samsung Electronics

SAMSUNG ELECTRONICS LED BUSINESS
1, Samsung-ro, Giheung-gu, Yongin-si,
Gyeonggi-do 17113, Korea

9.2 Test condition 2 **85 ℃**

Drive Current **700 mA**

Measurement Current **700 mA**

No.	Chromaticity Shift (△u'v')								
	7 000 h	8 000 h	9 000 h	10 000 h	11 000 h	12 000 h	13 000 h	14 000 h	15 000 h
1	0.000 4	0.000 5	0.000 5	0.000 5	0.000 7	0.000 7	0.000 8	0.000 9	0.000 8
2	0.000 3	0.000 4	0.000 5	0.000 6	0.000 7	0.000 8	0.000 9	0.000 9	0.000 9
3	0.000 4	0.000 4	0.000 5	0.000 6	0.000 8	0.000 7	0.000 9	0.000 9	0.000 9
4	0.000 3	0.000 4	0.000 4	0.000 5	0.000 6	0.000 6	0.000 7	0.000 7	0.000 7
5	0.000 5	0.000 6	0.000 5	0.000 7	0.000 9	0.000 9	0.001 1	0.001 1	0.001 0
6	0.000 2	0.000 2	0.000 3	0.000 6	0.000 6	0.000 7	0.000 8	0.000 8	0.000 8
7	0.000 3	0.000 4	0.000 4	0.000 6	0.000 8	0.000 8	0.001 0	0.001 0	0.001 0
8	0.000 3	0.000 3	0.000 4	0.000 6	0.000 7	0.000 8	0.000 8	0.000 9	0.000 8
9	0.000 4	0.000 4	0.000 5	0.000 7	0.000 7	0.000 9	0.000 9	0.001 0	0.001 0
10	0.000 4	0.000 5	0.000 4	0.000 6	0.000 7	0.000 7	0.000 7	0.000 8	0.000 7
11	0.000 4	0.000 6	0.000 8	0.000 9	0.001 2	0.001 3	0.001 4	0.001 5	0.001 6
12	0.000 3	0.000 5	0.000 7	0.000 9	0.001 0	0.001 2	0.001 3	0.001 3	0.001 4
13	0.000 4	0.000 5	0.000 5	0.000 7	0.000 8	0.001 0	0.001 2	0.001 1	0.001 2
14	0.000 3	0.000 5	0.000 6	0.000 9	0.001 0	0.001 1	0.001 2	0.001 3	0.001 4
15	0.000 4	0.000 5	0.000 7	0.000 9	0.001 1	0.001 3	0.001 3	0.001 4	0.001 4
16	0.000 4	0.000 6	0.000 8	0.000 8	0.001 0	0.001 1	0.001 3	0.001 3	0.001 4
17	0.000 5	0.000 7	0.000 8	0.000 9	0.001 0	0.001 2	0.001 3	0.001 4	0.001 4
18	0.000 3	0.000 5	0.000 6	0.000 9	0.001 0	0.001 2	0.001 3	0.001 4	0.001 4
19	0.000 3	0.000 7	0.000 6	0.000 8	0.001 0	0.001 0	0.001 2	0.001 2	0.001 3
20	0.000 3	0.000 6	0.000 7	0.000 8	0.001 1	0.001 1	0.001 3	0.001 4	0.001 4
Mean	0.000 4	0.000 5	0.000 6	0.000 7	0.000 9	0.001 0	0.001 1	0.001 1	0.001 1
Median	0.000 4	0.000 5	0.000 5	0.000 7	0.000 9	0.001 0	0.001 1	0.001 1	0.001 1
std.dev	0.000 1	0.000 1	0.000 1	0.000 1	0.000 2	0.000 2	0.000 2	0.000 2	0.000 3
Max	0.000 5	0.000 7	0.000 8	0.000 9	0.001 2	0.001 3	0.001 4	0.001 5	0.001 6
Min	0.000 2	0.000 2	0.000 3	0.000 5	0.000 6	0.000 6	0.000 7	0.000 7	0.000 7

This report may not be reproduced except in full
without permission of Samsung Electronics

SAMSUNG ELECTRONICS LED BUSINESS
1, Samsung-ro, Giheung-gu, Yongin-si,
Gyeonggi-do 17113, Korea

9.2 Test condition 2 **85 ℃**

Drive Current **700 mA**

Measurement Current **700 mA**

No.	Chromaticity Shift (△u'v')								
	16 000 h	17 000 h	18 000 h	19 000 h	20 000 h	21 000 h	22 000 h	23 000 h	24 000 h
1	0.000 8	0.000 7							
2	0.001 0	0.000 9							
3	0.000 9	0.000 8							
4	0.000 7	0.000 6							
5	0.001 1	0.001 0							
6	0.000 8	0.000 7							
7	0.001 1	0.001 0							
8	0.000 9	0.000 8							
9	0.001 0	0.000 9							
10	0.000 7	0.000 6							
11	0.001 6	0.001 4							
12	0.001 4	0.001 3							
13	0.001 2	0.001 1							
14	0.001 4	0.001 3							
15	0.001 5	0.001 3							
16	0.001 4	0.001 3							
17	0.001 4	0.001 2							
18	0.001 5	0.001 4							
19	0.001 2	0.001 1							
20	0.001 4	0.001 3							
Mean	0.001 1	0.001 0							
Median	0.001 1	0.001 0							
std.dev	0.000 3	0.000 3							
Max	0.001 6	0.001 4							
Min	0.000 7	0.000 6							

This report may not be reproduced except in full
without permission of Samsung Electronics

SAMSUNG ELECTRONICS LED BUSINESS
1, Samsung-ro, Giheung-gu, Yongin-si,
Gyeonggi-do 17113, Korea

9.2 Test condition 2 **85 °C**

Drive Current **700 mA**

Measurement Current **700 mA**

No.	CCT (K)							
	0 h	500 h	1 000 h	2 000 h	3 000 h	4 000 h	5 000 h	6 000 h
1	2 992	2 993	2 993	2 993	2 995	2 997	2 999	3 002
2	3 003	3 004	3 005	3 005	3 004	3 007	3 008	3 009
3	3 074	3 077	3 076	3 078	3 077	3 079	3 080	3 083
4	3 003	3 004	3 004	3 003	3 004	3 005	3 007	3 009
5	3 004	3 005	3 006	3 006	3 005	3 009	3 011	3 013
6	3 057	3 057	3 057	3 055	3 056	3 058	3 060	3 061
7	2 993	2 995	2 994	2 993	2 994	2 996	2 998	3 001
8	3 041	3 041	3 042	3 041	3 042	3 043	3 045	3 049
9	3 089	3 091	3 091	3 091	3 091	3 093	3 096	3 097
10	3 066	3 069	3 066	3 067	3 068	3 070	3 071	3 074
11	3 104	3 105	3 103	3 104	3 106	3 107	3 108	3 110
12	2 981	2 980	2 981	2 984	2 982	2 982	2 984	2 987
13	3 110	3 110	3 110	3 112	3 111	3 112	3 112	3 117
14	3 065	3 064	3 063	3 062	3 064	3 065	3 065	3 069
15	3 144	3 146	3 144	3 147	3 146	3 147	3 149	3 151
16	3 054	3 053	3 051	3 053	3 053	3 053	3 056	3 057
17	3 061	3 061	3 061	3 062	3 064	3 065	3 066	3 069
18	3 064	3 062	3 061	3 061	3 062	3 064	3 064	3 069
19	3 039	3 041	3 040	3 042	3 042	3 044	3 042	3 046
20	3 069	3 067	3 066	3 069	3 068	3 068	3 071	3 073
Mean	3 051	3 051	3 051	3 051	3 052	3 053	3 055	3 057
Median	3 059	3 059	3 059	3 058	3 059	3 061	3 062	3 065
std.dev	44	44	43	44	44	44	44	44
Max	3 144	3 146	3 144	3 147	3 146	3 147	3 149	3 151
Min	2 981	2 980	2 981	2 984	2 982	2 982	2 984	2 987

This report may not be reproduced except in full
without permission of Samsung Electronics

SAMSUNG ELECTRONICS LED BUSINESS
1, Samsung-ro, Giheung-gu, Yongin-si,
Gyeonggi-do 17113, Korea

9.2 Test condition 2 **85 ℃**

Drive Current **700 mA**

Measurement Current **700 mA**

No.	CCT (K)								
	7 000 h	8 000 h	9 000 h	10 000 h	11 000 h	12 000 h	13 000 h	14 000 h	15 000 h
1	3 001	3 003	3 003	3 003	3 007	3 007	3 007	3 010	3 005
2	3 010	3 011	3 012	3 014	3 017	3 017	3 019	3 019	3 016
3	3 083	3 085	3 086	3 088	3 091	3 090	3 092	3 094	3 090
4	3 008	3 010	3 010	3 011	3 013	3 015	3 016	3 017	3 013
5	3 014	3 016	3 016	3 018	3 021	3 022	3 023	3 025	3 022
6	3 061	3 062	3 063	3 069	3 069	3 072	3 075	3 075	3 072
7	3 000	3 001	3 002	3 004	3 006	3 007	3 010	3 010	3 006
8	3 049	3 048	3 051	3 052	3 055	3 056	3 056	3 058	3 054
9	3 098	3 098	3 101	3 102	3 103	3 105	3 107	3 108	3 104
10	3 075	3 077	3 076	3 077	3 080	3 079	3 081	3 083	3 078
11	3 113	3 118	3 122	3 125	3 131	3 135	3 136	3 139	3 139
12	2 987	2 991	2 995	2 999	3 002	3 006	3 009	3 009	3 009
13	3 118	3 121	3 121	3 124	3 127	3 131	3 135	3 134	3 132
14	3 072	3 075	3 079	3 084	3 088	3 090	3 093	3 095	3 095
15	3 154	3 157	3 161	3 165	3 170	3 175	3 176	3 178	3 178
16	3 062	3 066	3 071	3 072	3 075	3 078	3 081	3 083	3 082
17	3 071	3 075	3 078	3 081	3 083	3 086	3 089	3 091	3 089
18	3 070	3 074	3 076	3 083	3 086	3 090	3 093	3 094	3 094
19	3 044	3 054	3 052	3 058	3 061	3 062	3 066	3 066	3 066
20	3 075	3 080	3 083	3 087	3 093	3 093	3 097	3 099	3 098
Mean	3 058	3 061	3 063	3 066	3 069	3 071	3 073	3 074	3 072
Median	3 066	3 070	3 073	3 074	3 078	3 079	3 081	3 083	3 080
std.dev	45	45	45	46	47	48	48	48	49
Max	3 154	3 157	3 161	3 165	3 170	3 175	3 176	3 178	3 178
Min	2 987	2 991	2 995	2 999	3 002	3 006	3 007	3 009	3 005

This report may not be reproduced except in full
without permission of Samsung Electronics

SAMSUNG ELECTRONICS LED BUSINESS
1, Samsung-ro, Giheung-gu, Yongin-si,
Gyeonggi-do 17113, Korea

9.2 Test condition 2 **85 ℃**

Drive Current **700 mA**

Measurement Current **700 mA**

No.	CCT (K)								
	16 000 h	17 000 h	18 000 h	19 000 h	20 000 h	21 000 h	22 000 h	23 000 h	24 000 h
1	3 003	2 995							
2	3 014	3 006							
3	3 088	3 080							
4	3 011	3 004							
5	3 020	3 013							
6	3 071	3 064							
7	3 005	2 998							
8	3 052	3 045							
9	3 103	3 096							
10	3 076	3 069							
11	3 139	3 133							
12	3 009	3 003							
13	3 132	3 125							
14	3 094	3 088							
15	3 178	3 171							
16	3 081	3 075							
17	3 088	3 082							
18	3 095	3 089							
19	3 064	3 058							
20	3 098	3 091							
Mean	3 071	3 064							
Median	3 078	3 072							
std.dev	49	49							
Max	3 178	3 171							
Min	3 003	2 995							

This report may not be reproduced except in full
without permission of Samsung Electronics

SAMSUNG ELECTRONICS LED BUSINESS
1, Samsung-ro, Giheung-gu, Yongin-si,
Gyeonggi-do 17113, Korea

9.3 Test condition 3 **105 ℃**

Drive Current **700 mA**

Measurement Current **700 mA**

No.	Flux (lm)	Vf (V)	Lumen Maintenance (%)						
	0 h		500 h	1 000 h	2 000 h	3 000 h	4 000 h	5 000 h	6 000 h
1	300.0	2.999	98.9	98.5	97.9	97.9	97.8	97.7	97.7
2	290.6	2.999	98.8	98.3	98.1	97.8	97.7	97.6	97.6
3	295.9	2.989	98.8	98.7	98.8	98.4	98.3	97.9	97.9
4	292.6	2.961	98.8	98.6	98.3	98.5	98.3	97.9	98.0
5	293.6	2.933	99.1	99.0	98.5	98.7	98.1	97.9	97.7
6	299.9	3.011	98.7	98.2	98.4	98.6	97.9	98.2	98.1
7	294.5	3.004	99.5	98.9	98.8	98.5	98.3	98.1	97.7
8	296.8	2.987	98.8	98.6	98.0	98.1	98.0	97.8	97.8
9	296.2	2.948	98.9	98.8	98.2	98.2	97.7	97.8	97.8
10	297.4	2.932	98.8	98.6	98.6	98.5	98.3	98.1	97.8
11	295.8	3.043	99.3	98.5	98.8	98.2	98.0	97.9	97.8
12	296.0	3.004	98.8	98.7	98.3	98.4	98.2	98.0	98.1
13	291.8	3.003	99.0	98.9	98.5	98.5	97.9	98.2	98.1
14	295.9	2.968	98.9	98.4	98.3	98.4	98.1	98.1	98.0
15	293.5	2.961	99.4	98.8	98.8	98.5	98.4	97.8	97.4
16	287.1	3.045	98.8	98.8	99.0	98.4	98.2	98.0	97.8
17	296.1	3.056	99.2	99.1	98.7	98.8	98.6	98.4	98.4
18	300.6	3.010	99.2	98.6	98.7	98.5	98.1	98.2	98.3
19	290.9	3.000	99.5	98.9	98.7	98.5	98.2	98.2	98.1
20	289.4	2.994	98.9	98.9	98.6	98.6	98.3	98.2	98.1
Mean	294.7	2.99	99.0	98.7	98.5	98.4	98.1	98.0	97.9
Median	295.8	3.00	98.9	98.7	98.6	98.5	98.1	98.0	97.9
std.dev	3.6	0.03	0.3	0.2	0.3	0.2	0.2	0.2	0.2
Max	300.6	3.06	99.5	99.1	99.0	98.8	98.6	98.4	98.4
Min	287.1	2.93	98.7	98.2	97.9	97.8	97.7	97.6	97.4

This report may not be reproduced except in full
without permission of Samsung Electronics

SAMSUNG ELECTRONICS LED BUSINESS
1, Samsung-ro, Giheung-gu, Yongin-si,
Gyeonggi-do 17113, Korea

9.3 Test condition 3 **105 ℃**

Drive Current **700 mA**

Measurement Current **700 mA**

No.	Lumen Maintenance (%)								
	7 000 h	8 000 h	9 000 h	10 000 h	11 000 h	12 000 h	13 000 h	14 000 h	15 000 h
1	97.4	97.3	97.1	97.0	97.1	96.9	96.9	96.7	96.6
2	97.4	97.4	97.3	97.3	97.2	97.1	96.9	96.9	96.8
3	97.7	98.0	97.6	97.5	97.9	97.8	97.6	97.4	97.4
4	98.0	97.9	97.5	97.2	97.2	97.1	97.0	96.8	96.6
5	97.5	97.6	97.6	97.6	97.7	97.5	97.4	97.2	97.3
6	97.6	97.6	97.7	97.6	97.6	97.6	97.5	97.3	97.3
7	98.0	98.2	97.8	97.8	97.9	97.7	97.6	97.5	97.4
8	97.5	97.8	97.5	97.3	97.6	97.3	97.3	97.2	97.1
9	97.6	97.6	97.5	97.3	97.4	97.2	97.2	97.1	97.0
10	97.6	97.7	97.7	97.6	97.7	97.7	97.5	97.3	97.4
11	97.6	97.7	97.6	97.6	97.5	97.4	97.4	97.2	97.2
12	98.0	98.1	97.8	97.7	97.5	97.6	97.3	97.4	97.3
13	97.8	97.8	97.5	97.3	97.3	97.1	97.0	96.9	96.7
14	97.6	97.7	97.4	97.3	97.4	97.3	97.1	97.0	96.9
15	97.7	97.6	97.4	97.4	97.2	97.3	97.0	96.8	96.8
16	97.5	97.7	97.6	97.5	97.5	97.3	97.3	97.0	97.0
17	98.2	98.3	97.9	97.8	97.7	97.5	97.6	97.4	97.2
18	97.7	97.8	97.8	97.5	97.6	97.4	97.3	97.1	97.1
19	97.9	98.0	97.9	97.8	97.6	97.7	97.6	97.4	97.4
20	97.9	97.9	97.9	97.7	97.7	97.5	97.3	97.3	97.2
Mean	97.7	97.8	97.6	97.5	97.5	97.4	97.3	97.1	97.1
Median	97.6	97.8	97.6	97.5	97.6	97.4	97.3	97.2	97.1
std.dev	0.2	0.3	0.2	0.2	0.2	0.2	0.2	0.2	0.3
Max	98.2	98.3	97.9	97.8	97.9	97.8	97.6	97.5	97.4
Min	97.4	97.3	97.1	97.0	97.1	96.9	96.9	96.7	96.6

This report may not be reproduced except in full
without permission of Samsung Electronics

SAMSUNG ELECTRONICS LED BUSINESS
1, Samsung-ro, Giheung-gu, Yongin-si,
Gyeonggi-do 17113, Korea

9.3 Test condition 3 **105 ℃**

Drive Current **700 mA**

Measurement Current **700 mA**

No.	Lumen Maintenance (%)								
	16 000 h	17 000 h	18 000 h	19 000 h	20 000 h	21 000 h	22 000 h	23 000 h	24 000 h
1	96.6	96.6							
2	96.8	96.7							
3	97.4	97.4							
4	96.7	96.5							
5	97.3	97.2							
6	97.4	97.3							
7	97.4	97.4							
8	97.1	97.1							
9	97.0	97.0							
10	97.3	97.3							
11	97.2	97.1							
12	97.2	97.1							
13	96.7	96.5							
14	96.9	96.8							
15	96.7	96.6							
16	96.9	96.9							
17	97.2	97.1							
18	97.1	97.0							
19	97.4	97.3							
20	97.1	97.0							
Mean	97.1	97.0							
Median	97.1	97.0							
std.dev	0.3	0.3							
Max	97.4	97.4							
Min	96.6	96.5							

This report may not be reproduced except in full
without permission of Samsung Electronics

SAMSUNG ELECTRONICS LED BUSINESS
1, Samsung-ro, Giheung-gu, Yongin-si,
Gyeonggi-do 17113, Korea

9.3 Test condition 3 **105 ℃**

Drive Current **700 mA**

Measurement Current **700 mA**

No.	Cx	Cy	Chromaticity Shift (△u'v')						
	0 h		500 h	1 000 h	2 000 h	3 000 h	4 000 h	5 000 h	6 000 h
1	0.431 2	0.402 8	0.000 1	0.000 0	0.000 1	0.000 2	0.000 2	0.000 4	0.000 5
2	0.437 7	0.407 9	0.000 1	0.000 1	0.000 1	0.000 2	0.000 3	0.000 4	0.000 6
3	0.435 0	0.405 2	0.000 0	0.000 2	0.000 2	0.000 2	0.000 4	0.000 2	0.000 4
4	0.432 0	0.405 8	0.000 0	0.000 1	0.000 1	0.000 2	0.000 2	0.000 4	0.000 5
5	0.438 6	0.408 3	0.000 1	0.000 0	0.000 1	0.000 2	0.000 2	0.000 4	0.000 4
6	0.432 7	0.404 9	0.000 1	0.000 0	0.000 1	0.000 1	0.000 2	0.000 3	0.000 5
7	0.436 3	0.406 1	0.000 0	0.000 1	0.000 1	0.000 2	0.000 3	0.000 5	0.000 5
8	0.437 9	0.409 6	0.000 0	0.000 1	0.000 2	0.000 3	0.000 2	0.000 5	0.000 6
9	0.442 5	0.410 1	0.000 0	0.000 1	0.000 1	0.000 2	0.000 3	0.000 5	0.000 6
10	0.437 0	0.409 3	0.000 1	0.000 0	0.000 1	0.000 1	0.000 2	0.000 3	0.000 5
11	0.439 1	0.408 0	0.000 0	0.000 1	0.000 2	0.000 3	0.000 3	0.000 4	0.000 6
12	0.438 0	0.404 4	0.000 1	0.000 0	0.000 1	0.000 2	0.000 3	0.000 5	0.000 6
13	0.429 7	0.404 0	0.000 1	0.000 0	0.000 1	0.000 2	0.000 3	0.000 5	0.000 5
14	0.438 5	0.404 0	0.000 0	0.000 1	0.000 2	0.000 1	0.000 2	0.000 3	0.000 5
15	0.431 7	0.403 0	0.000 1	0.000 0	0.000 1	0.000 2	0.000 2	0.000 3	0.000 4
16	0.433 6	0.405 1	0.000 0	0.000 1	0.000 2	0.000 2	0.000 3	0.000 5	0.000 5
17	0.440 3	0.408 0	0.000 1	0.000 1	0.000 2	0.000 2	0.000 3	0.000 5	0.000 6
18	0.429 0	0.402 2	0.000 0	0.000 1	0.000 1	0.000 1	0.000 2	0.000 4	0.000 5
19	0.432 3	0.404 7	0.000 1	0.000 0	0.000 0	0.000 1	0.000 2	0.000 3	0.000 4
20	0.436 1	0.407 7	0.000 0	0.000 0	0.000 1	0.000 2	0.000 3	0.000 4	0.000 5
Mean	0.435 5	0.406 1	0.000 1	0.000 1	0.000 1	0.000 2	0.000 3	0.000 4	0.000 5
Median	0.436 2	0.405 5	0.000 1	0.000 1	0.000 1	0.000 2	0.000 3	0.000 4	0.000 5
std.dev	0.003 7	0.002 4	0.000 0	0.000 0	0.000 1	0.000 1	0.000 1	0.000 1	0.000 1
Max	0.442 5	0.410 1	0.000 1	0.000 2	0.000 2	0.000 3	0.000 4	0.000 5	0.000 6
Min	0.429 0	0.402 2	0.000 0	0.000 0	0.000 0	0.000 1	0.000 2	0.000 2	0.000 4

This report may not be reproduced except in full
without permission of Samsung Electronics

SAMSUNG ELECTRONICS LED BUSINESS
1, Samsung-ro, Giheung-gu, Yongin-si,
Gyeonggi-do 17113, Korea

9.3 Test condition 3 **105 ℃**

Drive Current **700 mA**

Measurement Current **700 mA**

No.	Chromaticity Shift (△u'v')								
	7 000 h	8 000 h	9 000 h	10 000 h	11 000 h	12 000 h	13 000 h	14 000 h	15 000 h
1	0.000 5	0.000 6	0.000 6	0.000 8	0.000 9	0.001 0	0.001 1	0.001 1	0.001 2
2	0.000 5	0.000 7	0.000 6	0.000 7	0.000 9	0.000 8	0.001 1	0.001 0	0.001 1
3	0.000 2	0.000 6	0.000 5	0.000 7	0.000 9	0.000 9	0.001 1	0.001 0	0.001 1
4	0.000 5	0.000 7	0.000 8	0.000 9	0.001 1	0.001 1	0.001 3	0.001 3	0.001 5
5	0.000 5	0.000 6	0.000 6	0.000 8	0.000 9	0.001 0	0.001 1	0.001 1	0.001 2
6	0.000 5	0.000 6	0.000 7	0.000 8	0.000 9	0.001 0	0.001 1	0.001 2	0.001 3
7	0.000 6	0.000 7	0.000 8	0.001 0	0.001 1	0.001 2	0.001 3	0.001 4	0.001 5
8	0.000 6	0.000 8	0.000 8	0.001 0	0.001 2	0.001 2	0.001 3	0.001 4	0.001 5
9	0.000 6	0.000 7	0.000 8	0.001 0	0.001 1	0.001 2	0.001 3	0.001 4	0.001 5
10	0.000 5	0.000 6	0.000 6	0.000 8	0.000 9	0.001 1	0.001 2	0.001 2	0.001 3
11	0.000 5	0.000 7	0.000 6	0.000 8	0.000 9	0.000 9	0.001 1	0.001 1	0.001 2
12	0.000 7	0.000 9	0.001 0	0.001 1	0.001 4	0.001 4	0.001 6	0.001 7	0.001 8
13	0.000 6	0.000 8	0.000 8	0.001 0	0.001 1	0.001 2	0.001 3	0.001 4	0.001 5
14	0.000 5	0.000 6	0.000 7	0.000 8	0.000 9	0.001 0	0.001 2	0.001 2	0.001 3
15	0.000 4	0.000 5	0.000 7	0.000 8	0.000 9	0.000 9	0.001 0	0.001 1	0.001 2
16	0.000 6	0.000 7	0.000 9	0.000 9	0.001 1	0.001 2	0.001 3	0.001 4	0.001 5
17	0.000 6	0.000 8	0.000 9	0.001 0	0.001 1	0.001 1	0.001 3	0.001 4	0.001 5
18	0.000 5	0.000 7	0.000 9	0.001 0	0.001 2	0.001 3	0.001 4	0.001 5	0.001 7
19	0.000 5	0.000 6	0.000 6	0.000 8	0.000 9	0.001 0	0.001 1	0.001 2	0.001 3
20	0.000 6	0.000 7	0.000 7	0.000 9	0.001 1	0.001 2	0.001 3	0.001 4	0.001 5
Mean	0.000 5	0.000 7	0.000 7	0.000 9	0.001 0	0.001 1	0.001 2	0.001 3	0.001 4
Median	0.000 5	0.000 7	0.000 7	0.000 9	0.001 0	0.001 1	0.001 2	0.001 3	0.001 4
std.dev	0.000 1	0.000 1	0.000 1	0.000 1	0.000 1	0.000 2	0.000 1	0.000 2	0.000 2
Max	0.000 7	0.000 9	0.001 0	0.001 1	0.001 4	0.001 4	0.001 6	0.001 7	0.001 8
Min	0.000 2	0.000 5	0.000 5	0.000 7	0.000 9	0.000 8	0.001 0	0.001 0	0.001 1

This report may not be reproduced except in full
without permission of Samsung Electronics

SAMSUNG ELECTRONICS LED BUSINESS
1, Samsung-ro, Giheung-gu, Yongin-si,
Gyeonggi-do 17113, Korea

9.3 Test condition 3 **105 ℃**

Drive Current **700 mA**

Measurement Current **700 mA**

No.	Chromaticity Shift (△u'v')								
	16 000 h	17 000 h	18 000 h	19 000 h	20 000 h	21 000 h	22 000 h	23 000 h	24 000 h
1	0.001 3	0.001 5							
2	0.001 2	0.001 3							
3	0.001 3	0.001 4							
4	0.001 6	0.001 8							
5	0.001 4	0.001 5							
6	0.001 4	0.001 6							
7	0.001 7	0.001 8							
8	0.001 7	0.001 8							
9	0.001 7	0.001 8							
10	0.001 5	0.001 6							
11	0.001 3	0.001 4							
12	0.002 0	0.002 2							
13	0.001 7	0.001 8							
14	0.001 5	0.001 6							
15	0.001 4	0.001 5							
16	0.001 7	0.001 8							
17	0.001 6	0.001 8							
18	0.001 8	0.002 0							
19	0.001 5	0.001 6							
20	0.001 7	0.001 8							
Mean	0.001 5	0.001 7							
Median	0.001 6	0.001 7							
std.dev	0.000 2	0.000 2							
Max	0.002 0	0.002 2							
Min	0.001 2	0.001 3							

This report may not be reproduced except in full
without permission of Samsung Electronics

SAMSUNG ELECTRONICS LED BUSINESS
1, Samsung-ro, Giheung-gu, Yongin-si,
Gyeonggi-do 17113, Korea

9.3 Test condition 3 **105 ℃**

Drive Current **700 mA**

Measurement Current **700 mA**

No.	CCT (K)							
	0 h	500 h	1 000 h	2 000 h	3 000 h	4 000 h	5 000 h	6 000 h
1	3 092	3 091	3 093	3 094	3 095	3 095	3 096	3 097
2	3 021	3 020	3 022	3 023	3 024	3 024	3 026	3 028
3	3 045	3 044	3 047	3 048	3 048	3 050	3 050	3 051
4	3 102	3 102	3 104	3 104	3 104	3 106	3 107	3 108
5	3 008	3 006	3 008	3 009	3 010	3 011	3 013	3 013
6	3 083	3 082	3 084	3 085	3 085	3 086	3 087	3 089
7	3 030	3 029	3 032	3 031	3 032	3 034	3 035	3 036
8	3 032	3 031	3 033	3 034	3 035	3 035	3 037	3 038
9	2 959	2 958	2 960	2 961	2 962	2 962	2 963	2 964
10	3 044	3 041	3 044	3 045	3 045	3 046	3 048	3 048
11	2 998	2 997	3 000	3 001	3 001	3 002	3 003	3 005
12	2 986	2 985	2 987	2 988	2 990	2 991	2 992	2 993
13	3 129	3 128	3 130	3 130	3 132	3 132	3 134	3 134
14	2 975	2 974	2 977	2 977	2 976	2 978	2 979	2 980
15	3 085	3 084	3 085	3 086	3 087	3 088	3 089	3 090
16	3 069	3 069	3 071	3 071	3 072	3 073	3 074	3 075
17	2 978	2 977	2 980	2 980	2 981	2 982	2 983	2 984
18	3 128	3 128	3 130	3 131	3 131	3 132	3 134	3 134
19	3 089	3 088	3 089	3 089	3 090	3 092	3 092	3 093
20	3 047	3 046	3 048	3 048	3 050	3 051	3 051	3 052
Mean	3 045	3 044	3 046	3 047	3 047	3 048	3 050	3 051
Median	3 045	3 043	3 046	3 047	3 046	3 048	3 049	3 049
std.dev	51	51	51	51	51	51	51	51
Max	3 129	3 128	3 130	3 131	3 132	3 132	3 134	3 134
Min	2 959	2 958	2 960	2 961	2 962	2 962	2 963	2 964

This report may not be reproduced except in full
without permission of Samsung Electronics

SAMSUNG ELECTRONICS LED BUSINESS
1, Samsung-ro, Giheung-gu, Yongin-si,
Gyeonggi-do 17113, Korea

9.3 Test condition 3 **105 ℃**

Drive Current **700 mA**

Measurement Current **700 mA**

No.	CCT (K)								
	7 000 h	8 000 h	9 000 h	10 000 h	11 000 h	12 000 h	13 000 h	14 000 h	15 000 h
1	3 097	3 097	3 097	3 097	3 098	3 099	3 098	3 096	3 096
2	3 026	3 027	3 026	3 026	3 027	3 027	3 028	3 025	3 025
3	3 048	3 053	3 052	3 051	3 052	3 053	3 052	3 050	3 050
4	3 107	3 108	3 107	3 107	3 108	3 107	3 108	3 105	3 104
5	3 014	3 014	3 014	3 013	3 014	3 014	3 014	3 012	3 012
6	3 088	3 088	3 088	3 087	3 089	3 088	3 089	3 086	3 086
7	3 035	3 035	3 035	3 035	3 036	3 036	3 035	3 033	3 033
8	3 037	3 038	3 038	3 037	3 038	3 038	3 038	3 036	3 035
9	2 963	2 964	2 964	2 963	2 964	2 964	2 965	2 962	2 962
10	3 048	3 048	3 047	3 047	3 048	3 048	3 048	3 045	3 045
11	3 003	3 004	3 003	3 003	3 003	3 003	3 003	3 001	3 000
12	2 993	2 993	2 993	2 993	2 994	2 995	2 995	2 992	2 992
13	3 134	3 134	3 134	3 133	3 134	3 133	3 134	3 131	3 131
14	2 980	2 980	2 979	2 979	2 980	2 980	2 980	2 977	2 977
15	3 089	3 089	3 090	3 088	3 089	3 089	3 090	3 087	3 087
16	3 075	3 075	3 075	3 074	3 075	3 075	3 075	3 073	3 072
17	2 984	2 984	2 985	2 984	2 985	2 985	2 986	2 983	2 983
18	3 133	3 133	3 134	3 133	3 133	3 133	3 134	3 131	3 130
19	3 092	3 093	3 091	3 091	3 092	3 092	3 092	3 089	3 089
20	3 053	3 053	3 052	3 052	3 053	3 053	3 053	3 051	3 050
Mean	3 050	3 050	3 050	3 050	3 051	3 051	3 051	3 048	3 048
Median	3 048	3 050	3 049	3 049	3 050	3 051	3 050	3 048	3 047
std.dev	51	51	51	51	51	51	51	51	51
Max	3 134	3 134	3 134	3 133	3 134	3 133	3 134	3 131	3 131
Min	2 963	2 964	2 964	2 963	2 964	2 964	2 965	2 962	2 962

This report may not be reproduced except in full
without permission of Samsung Electronics

SAMSUNG ELECTRONICS LED BUSINESS
1, Samsung-ro, Giheung-gu, Yongin-si,
Gyeonggi-do 17113, Korea

9.3 Test condition 3 **105 ℃**

Drive Current **700 mA**

Measurement Current **700 mA**

No.	CCT (K)								
	16 000 h	17 000 h	18 000 h	19 000 h	20 000 h	21 000 h	22 000 h	23 000 h	24 000 h
1	3 095	3 091							
2	3 024	3 021							
3	3 049	3 045							
4	3 104	3 100							
5	3 011	3 007							
6	3 085	3 081							
7	3 032	3 028							
8	3 034	3 031							
9	2 961	2 958							
10	3 044	3 040							
11	2 999	2 995							
12	2 992	2 988							
13	3 130	3 125							
14	2 976	2 972							
15	3 086	3 082							
16	3 071	3 067							
17	2 982	2 979							
18	3 130	3 125							
19	3 088	3 084							
20	3 050	3 046							
Mean	3 047	3 043							
Median	3 047	3 043							
std.dev	51	50							
Max	3 130	3 125							
Min	2 961	2 958							

This report may not be reproduced except in full
without permission of Samsung Electronics

SAMSUNG ELECTRONICS LED BUSINESS
1, Samsung-ro, Giheung-gu, Yongin-si,
Gyeonggi-do 17113, Korea

9.4 Chart

<Lumen Maintenance>

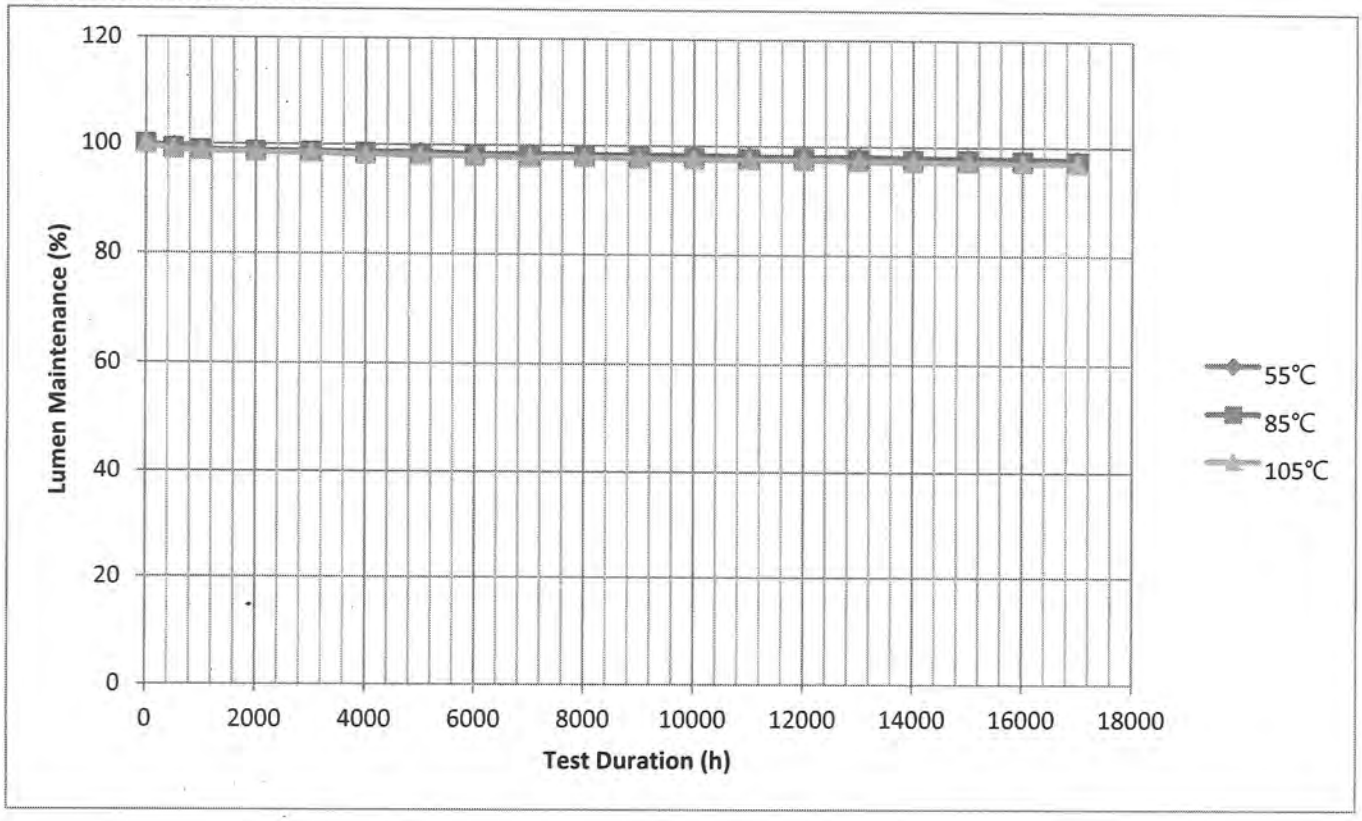

<Chromaticity Shift>

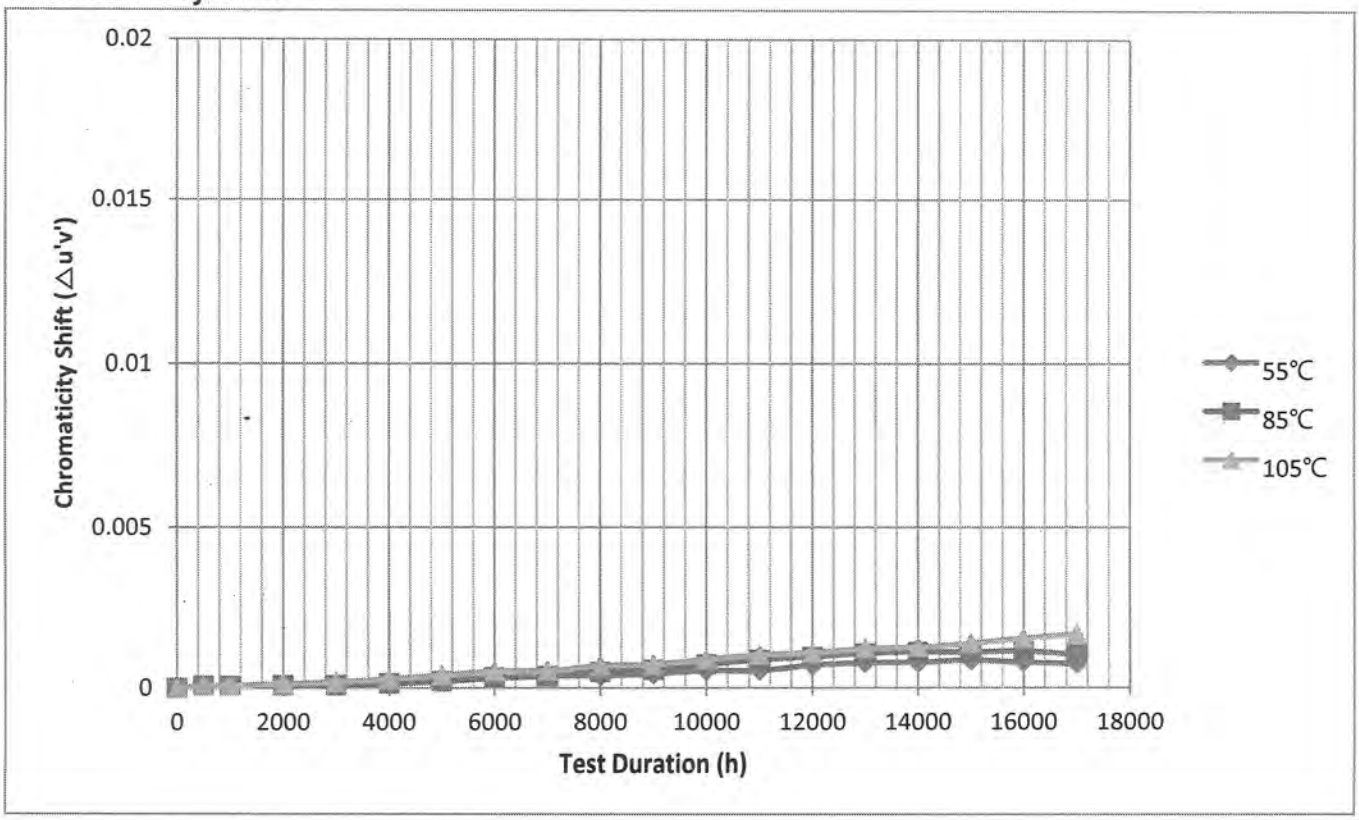

<CCT>

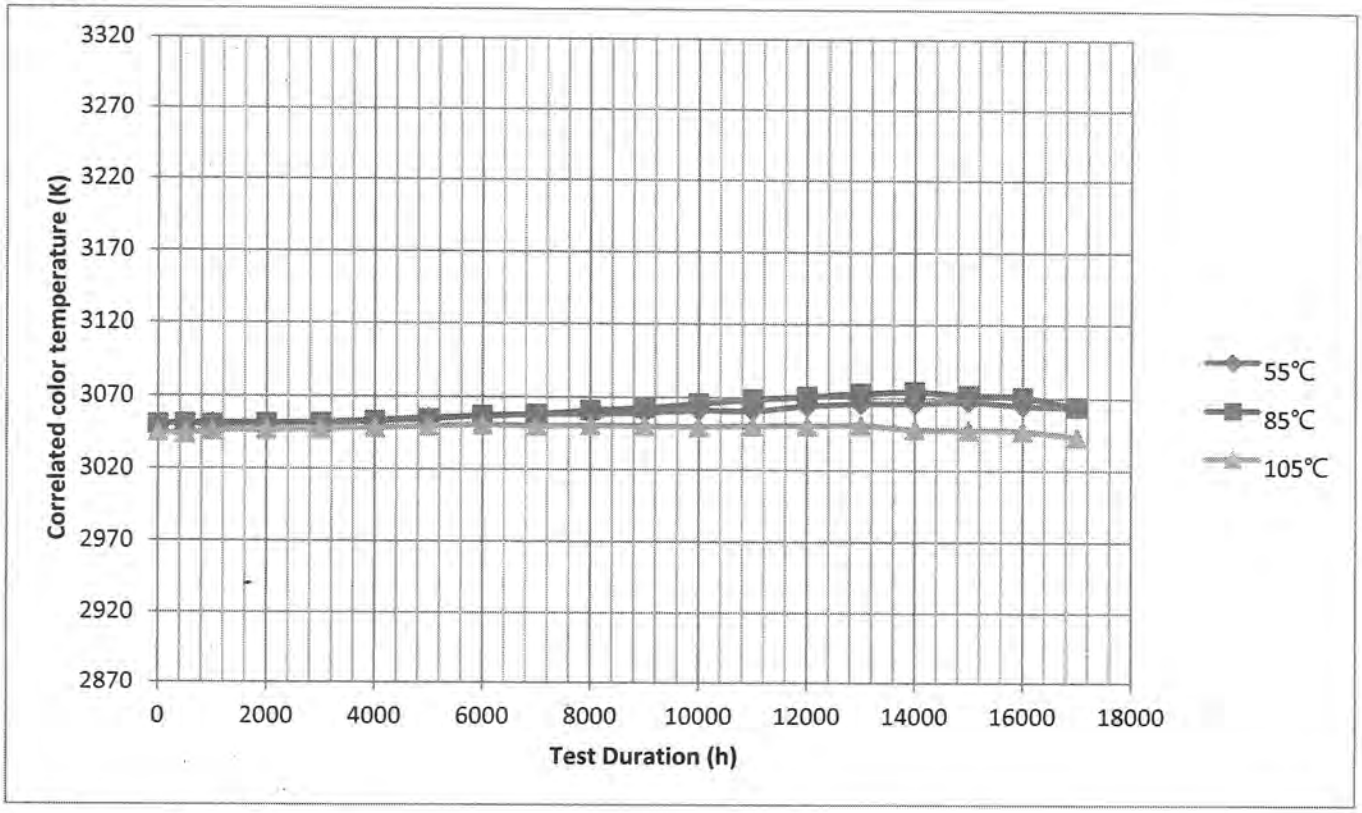

10. Observation of failures

No optical, Electrical or mechanical failure of any LED Package was seen during the lifetime testing.

11. LED light source monitoring interval

0	500	1 000	2 000	3 000	4 000	5 000	6 000	7 000	8 000
9 000	10 000	11 000	12 000	13 000	14 000	15 000	16 000	17 000	

12. Photometric measurement uncertainty

3.5%

13. TM-21-11 Report : Projecting Long Term Lumen Maintenance of LED Light Source

Table 1: Report at each LM-80 Test Condition					
Description of LED Light Source Tested (manufacturer, model, catalog number)					
Test Condition 1 - 55°C Case Temp		Test Condition 2 - 85°C Case Temp		Test Condition 3 - 105°C Case Temp	
Sample size	20	Sample size	20	Sample size	20
Number of failures	0	Number of failures	0	Number of failures	0
DUT drive current used in the test (mA)	700	DUT drive current used in the test (mA)	700	DUT drive current used in the test (mA)	700
Test duration (hours)	17,000	Test duration (hours)	17,000	Test duration (hours)	17,000
Test duration used for projection (hour to hour)	8,000 - 17,000	Test duration used for projection (hour to hour)	8,000 - 17,000	Test duration used for projection (hour to hour)	8,000 - 17,000
Tested case temperature (°C)	55	Tested case temperature (°C)	85	Tested case temperature (°C)	105
α	6.432E-07	α	6.394E-07	α	8.715E-07
B	0.988	B	0.985	B	0.984
Reported L90(17k) (hours)	>102000	Reported L90(17k) (hours)	>102000	Reported L90(17k) (hours)	>102000

This report may not be reproduced except in full
without permission of Samsung Electronics

SAMSUNG ELECTRONICS LED BUSINESS
1, Samsung-ro, Giheung-gu, Yongin-si,
Gyeonggi-do 17113, Korea

14. Dimension of samples

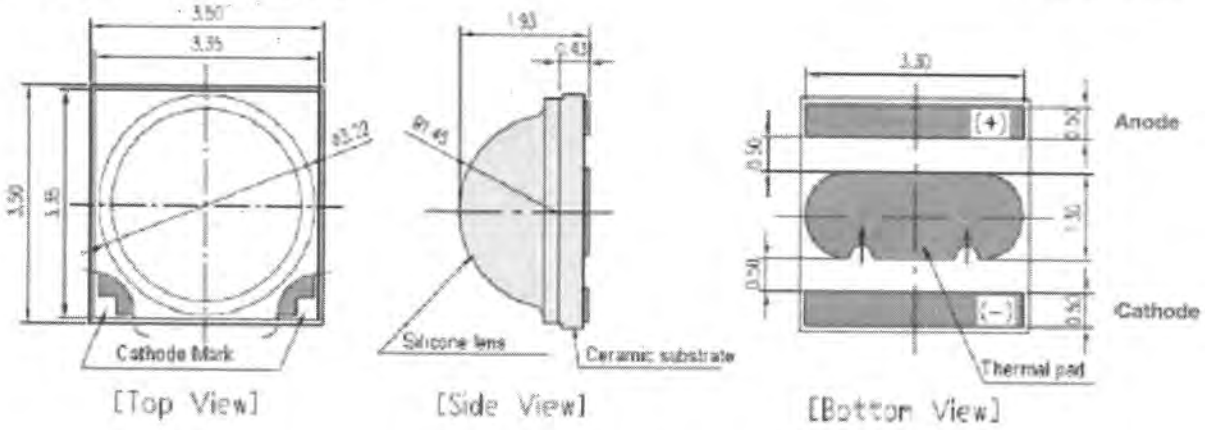

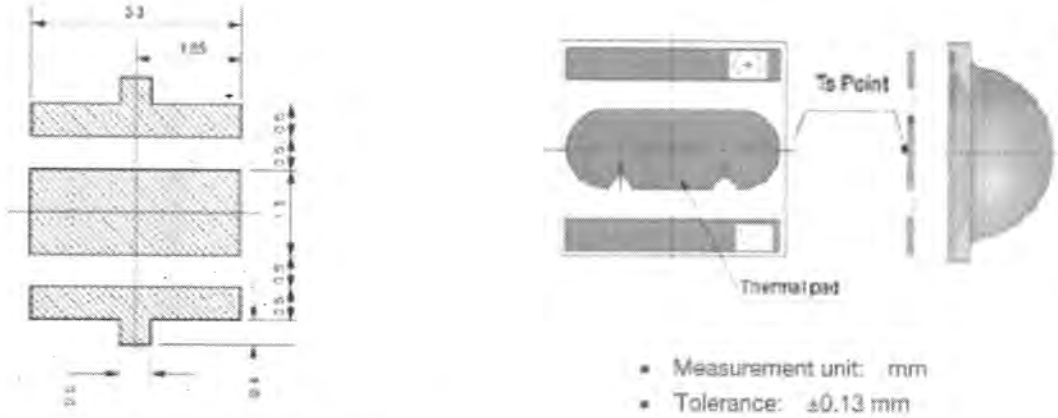

Recommended Soldering Pattern

15. Cover models

Series Name	Model Code	CCT(K)
LH351B	SPHWH2L3D30C**V***	3000
	SPHWH2L3D30C**U***	3500
	SPHWH2L3D30C**T***	4000
	SPHWH2L3D30C**R***	5000
	SPHWH2L3D30C**Q***	5700
	SPHWH2L3D30C**P***	6500

**********END OF TEST REPORT**********

This report may not be reproduced except in full
without permission of Samsung Electronics

SAMSUNG ELECTRONICS LED BUSINESS
1, Samsung-ro, Giheung-gu, Yongin-si,
Gyeonggi-do 17113, Korea