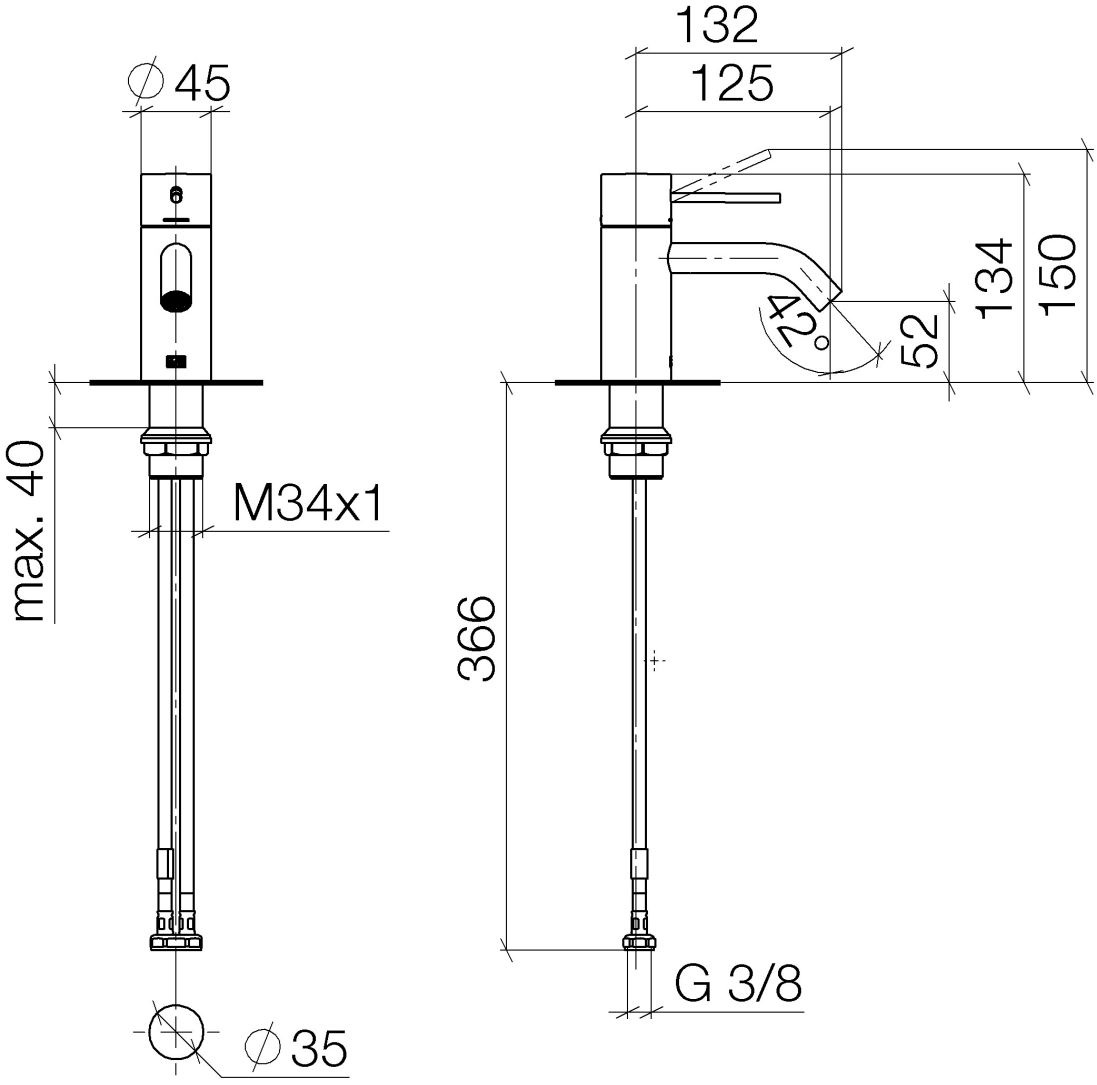
∅45
max. 40
M34x1
∅35
132
125
134
150
24°
52
366
G 3/8