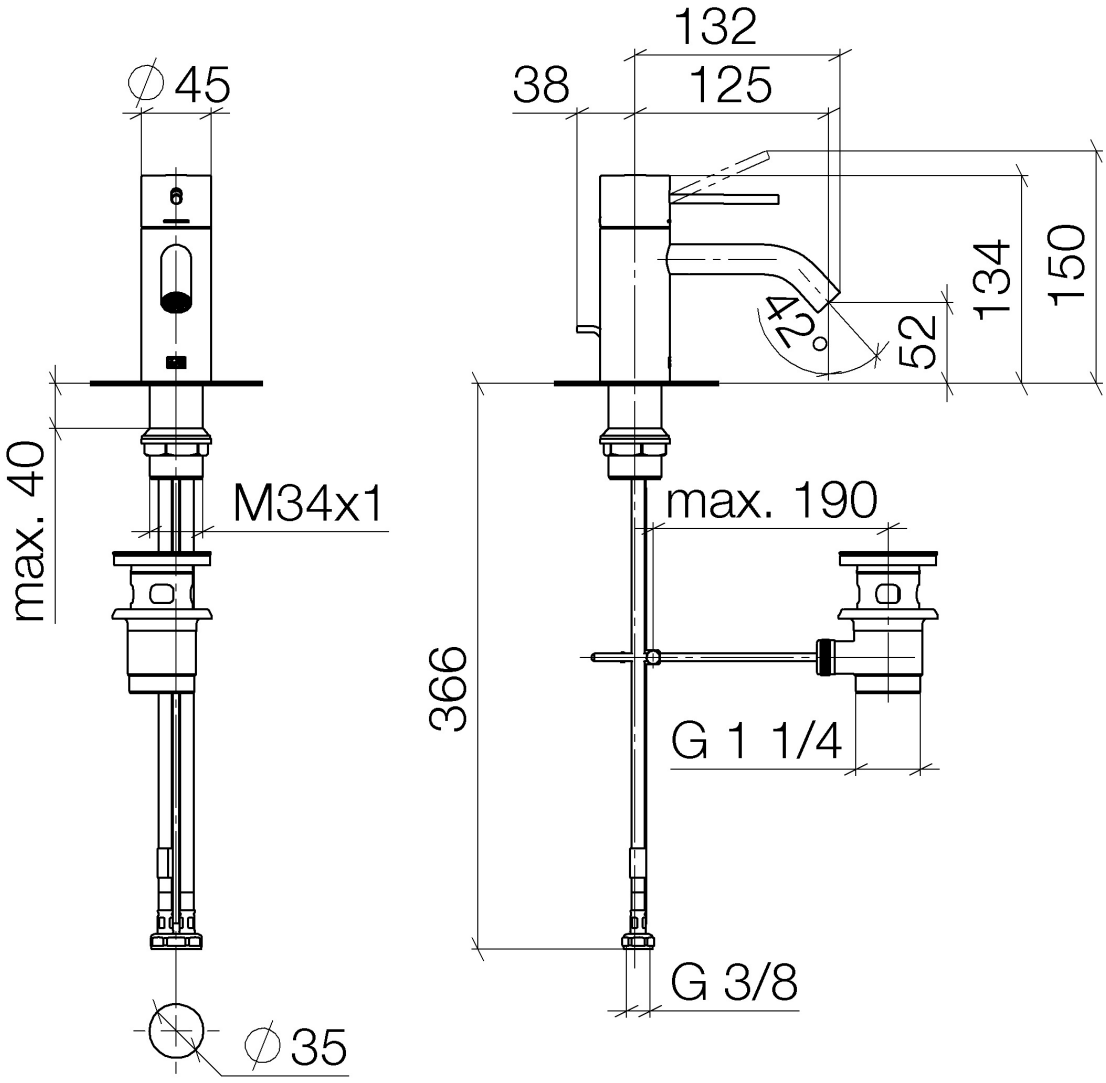
∅45
max. 40
M34x1
∅35
132
38
125
134
150
52
27°
max. 190
366
G 1 1/4
G 3/8