TEAR SHEET

Canto 68" Linear Chandelier
Item # TOB 5353BZ/HAB-L

Designer: Thomas O'Brien

O/A Height: 61.5"
Fixture Height: 16.25"
Min. Custom Height: 22.5"
Width: 68"
Canopy: 4.75" Round
Finishes: BZ/HAB, HAB, PN
Shade Treatments: L
Shade Details: 15.75" x 17" x 8"
Socket: 2 - E26 Keyless
Wattage: 2 - 15 LED A19
Weight: 10 Pounds

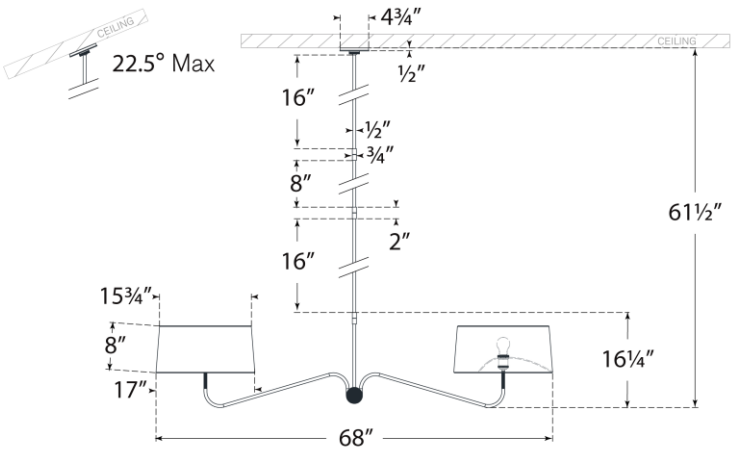

Front View

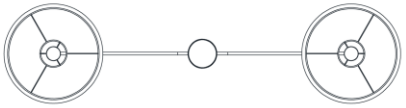
Top View

VISUAL COMFORT & CO.