TEAR SHEET

Piaf Triple Sconce
Item # TOB 2452AG-L

Designer: Thomas O'Brien

Height: 18.75"
Width: 23"
Extension: 11.5"
Backplate: 4.75" Round
Finishes: AG, AI, PW, SG
Shade Treatments: L
Shade Details: 2.5" x 6.5" x 6"
Socket: 3 - E12 Candelabra
Wattage: 3 - 6.5 LED B11
Weight: 4 Pounds

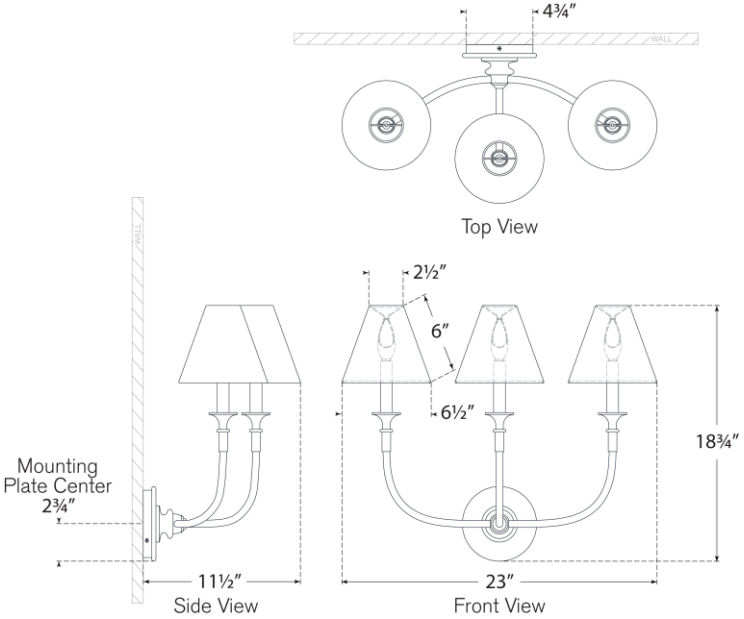

VISUAL COMFORT