INSTALLATION INSTRUCTIONS

Model# 73233-738

READ AND SAVE THESE INSTRUCTIONS

WARNING! SHUT POWER OFF AT FUSE OR CIRCUIT BREAKER.

AVERTISSEMENT! COUPER LE COURANT AU NIVEAU DES FUSIBLES OU DU DISJONCTEUR.

PREPARING FOR INSTALLATION (Fig. 1)

1. Shut off power at the fuse box or circuit breaker box and remove the old fixture including the mounting hardware.
2. Carefully unpack your new fixture and lay out all the parts in a clear area. Take care not to misplace any small parts necessary for installation.
3. Screw mounting screws (C) into mounting plate (B) ensuring they are spaced the same distance apart as the holes in the back plate (G) and tighten with hex nuts provided. The length of mounting screws (C) may be adjusted if necessary.
4. Attach mounting plate (B) using outlet box screws (F) to the outlet box (A) (not supplied). The side of mounting plate marked "GND" must face out. (Fig.1)

CONNECTING THE WIRES (Fig. 2)

5. Connect the electrical wires as shown in Fig.2 with connectors (E), making sure that all wire connectors are secured. If your outlet box has a ground wire (green or bare copper), connect the fixture's ground wire to it. Otherwise, connect the fixture's ground wire directly to the mounting plate (B) using the green screw (D) provided. After the wires are connected, carefully tuck them inside the outlet box (A).

FINISHING THE INSTALLATION (Fig. 1)

6. Place the back plate (G) over mounting screws (C), follow by rubber gasket (M), then secure to wall using cap nuts (H). (Fig.1)
7. Loosen screws (L) and separate fixture frame (O) from cover (J).
8. Install (3) three candelabra base bulbs (N) up to 60 Watts, or CFL or LED equivalent (not included), in accordance with the fixture specification. **(DO NOT EXCEED THE MAXIMUM WATTAGE RATING) (NE PAS DEPASSER LA PUISSANCE NOMINALE MAXIMALE!)**
9. Secure cover (J) to fixture frame (O) by screwing screws (L) until tight.
10. To prevent moisture from entering outlet box (A) and causing a short, use clear silicone sealant to outline the outside of fixture back plate (G) where it meets the wall leaving a space at bottom to allow moisture a means to escape. (Fig.3)
11. This fixture is ETL listed for wet location applications.

Your installation is now complete. Return power to the outlet box and test the fixture.

Fig. 1

Mounting plate (1) (Part#A-020)
Ground screw (1)
Mounting screws (2)
Candle cover (3) (Part#CCV21054P-861)

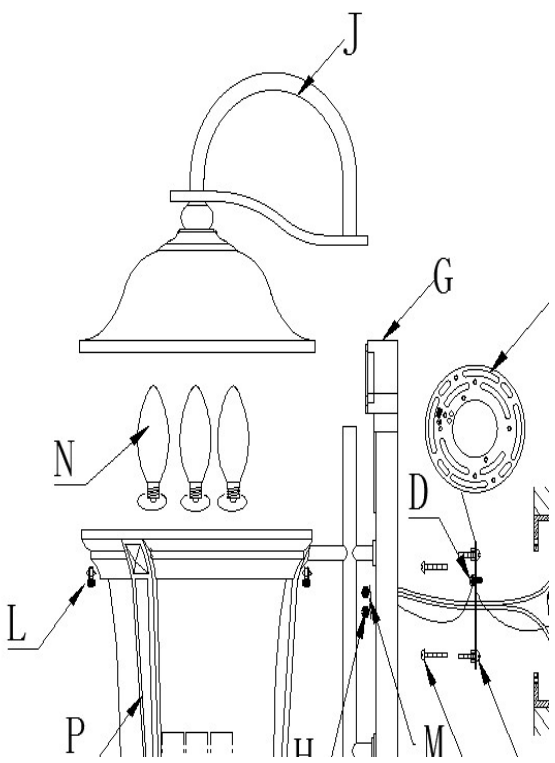

Fig.2

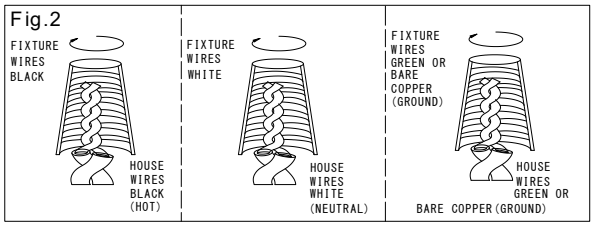

Fig 3

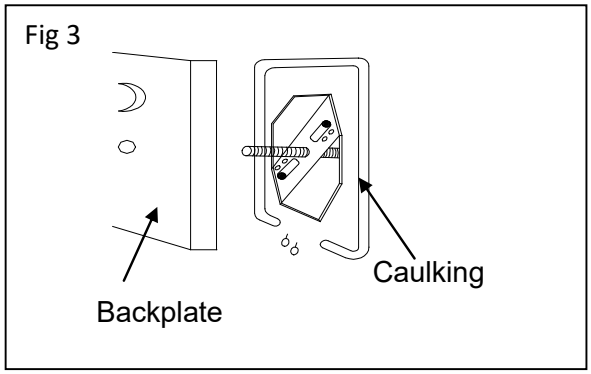

"CAUTION-RISK OF FIRE CONSULT A QUALIFIED ELECTRICIAN TO ENSURE CORRECT BRANCH CIRCUIT CONDUCTOR"

ATTENTION – RISQUE D'INCENDIE, CONSULTER UN ÉLECTRICIEN QUALIFIÉ POUR VOUS ASSURER QUE LES CONDUCTEURS DE LA DÉRIVATION SONT ADÉQUATS.