INSTALLATION INSTRUCTIONS

For MODEL#P6105/P6106/P6107/P6108/P6109(11/20/2017)

WARNING! SHUT POWER OFF AT FUSE OR CIRCUIT BREAKER.

FOR HOUSEHOLD USE ONLY, SAVE THESE INSTRUCTIONS

WARNING: To avoid the risk of electric shock, be sure to turn off main power prior to install mirror light or maintenance. Please read the Installtion Manual thoroughly. Clean mirror light periodically to help maintain its new appearance over the years. Use only a soft brush or lint free cloth to avoid scratching the finish. Never use water when cleaning, this probably cause electric shock.

HANGING THE FIXTURE

1. Carefully unpack your new mirror and lay out all the parts on a clear area.Take care not to lose any small parts necessary for installation.

2. Apply Drill Hole Location paper on desirable installation wall with double sided tape (Fig.1). Drill 4 holes following the item# indicated on the Drill location paper (Fig. 2).

3. Hammer 4 anchors (C) into each drilled hole and tighten each screw with a screwdriver. DO NOT fully tighten the screw, leave 0.2 inch gap between the screw and the wall in order to hang the mirror (Fig.3).

4. Pass through the mounting plate (E) on the cord and green wire. Connect the electrical wires as shown in (Fig.4), making sure that all wire connectors are secured. If your outlet box has a ground wire (green or bare copper), connect the fixture's Ground wire to it. If not, consult your electrician for proper grounding. After the wires are connected, tuck them carefully inside the outlet. Attach the mounting plate (E) to the outlet box (not supplied) with mounting screws (F). insert washer (H) into the the Middle hole of the mounting plate(E) as shown in (Fig.5).

5.Hang all four corners of the mirror on to the anchors and make sure the cross slot at the back of the mirror is securely fastened on the screws (Fig.6).

6. your installtion is now completed. Return power to the outlet box and test the fixture, the touch button will appear bule as in standby mode. See below operation instruction for your reference.

Fig.1

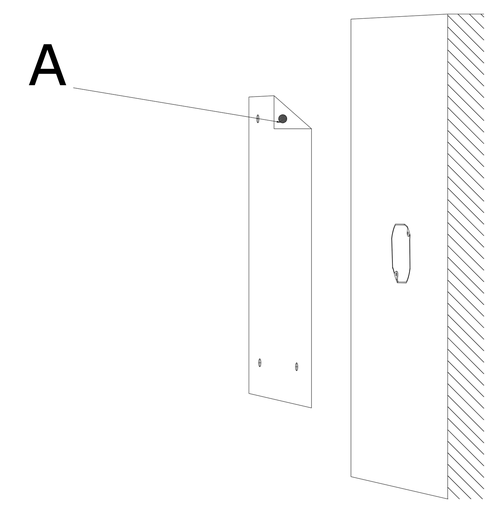

Fig.2

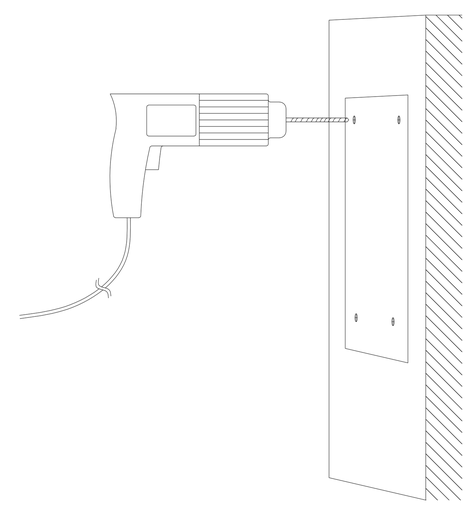

Fig.3

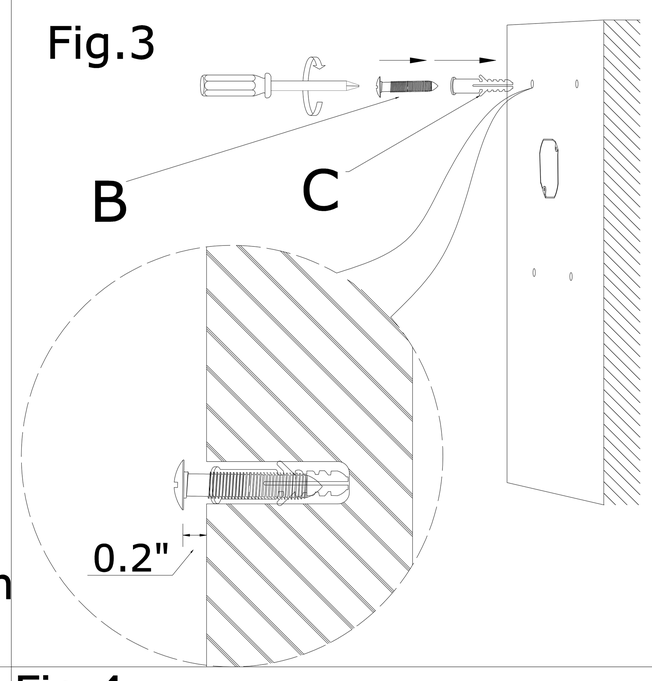

A	Doubie -sided adhesive	4PCS
B	Screw	4PCS
C	Anchor	4PCS
D	Wire nut	3PCS
E	Mounting plate	1PC
F	Mounting screw	2PCS

Fig.6

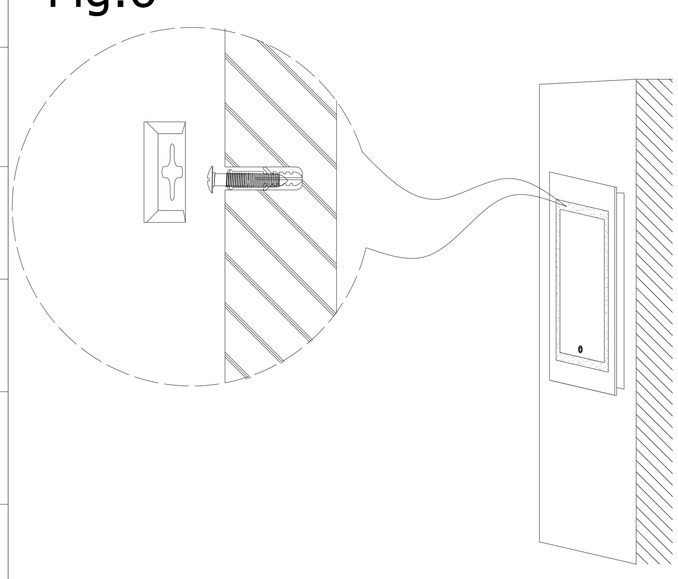

Fig.5

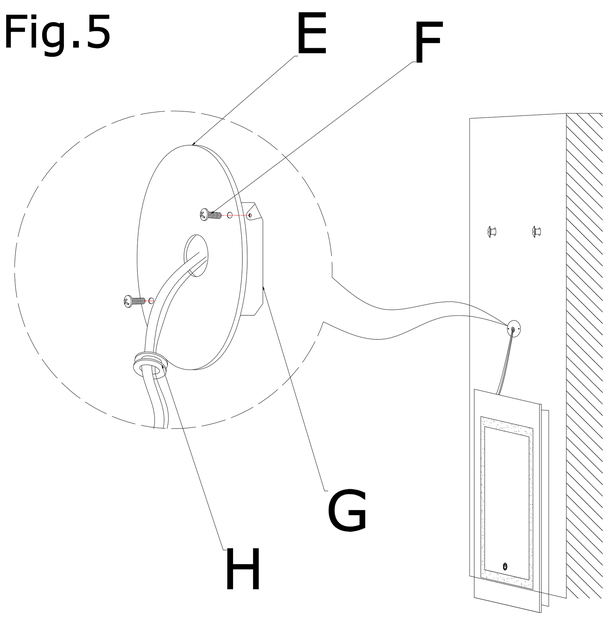

Fig.4

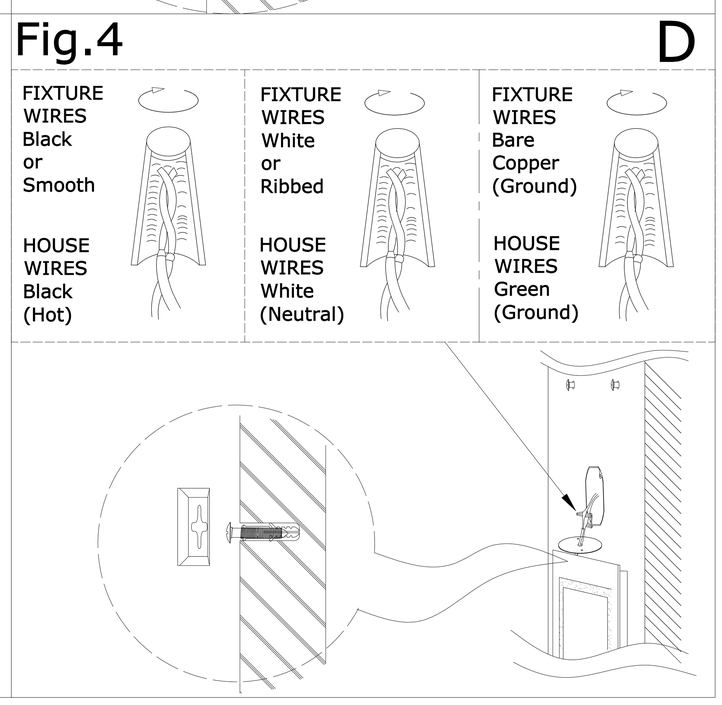

OPERATION INSTRUCTIONS

1.The touch button will appear blue color as a standby mode.
2.Quick touch the button and color change to white. At the same time, the LED main light on.
3.Quick touch the button again, the LED main light off and LED night light on.
4.Quick touch the button again, the LED main light and night light all off.
The button color change to blue color and remain as the standby situation.

Intertek

american lighting association