DALS LIGHTING

Canada
80, de la Seigneurie blvd., E.
Blainville, Quebec J7C 4N1

U.S.A.
4383, NW 124th Ave.,
Coral Springs, Florida 33065

877.430.1818
info@dals.com
dals.com

MODEL **RGM6-CC**

NAME **FACET**

6-Inch Regressed Gimbal Downlight With Thin Trim

This versatile modern gimbal with multi-directional adjustable swivel produces a bright glow with minimal glare as a result of its regressed light source.

PROJECT:	**TYPE:**
DATE:	**QTY:**

NOTES:

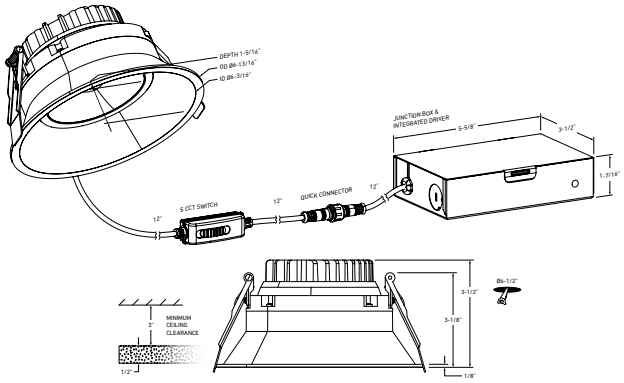

QUICK SPECS

SIZE	WATTS	DELIVERED LUMENS*	COLOR °T 5CCT	CRI	VOLTAGE	BEAM ANGLE	FINISH
6"	20W	1500lm	2700K 3000K 3500K 4000K 5000K	90	120V	40°	○ White ☐ ● Black ☐

*Lumen output measured at 3000K

LIGHT DISTRIBUTION

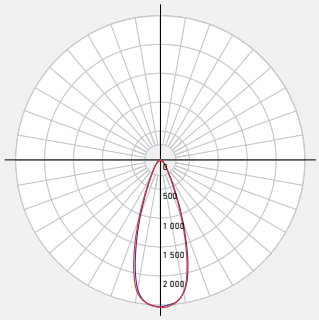

CONSTRUCTION

Lens
Clear

Lens material
Acrylic

Type of optics
Optical lens

Housing material
Cast aluminum

Type of LED
COB

Cut hole size
6-1/2"

RATINGS

Placement
Indoor/Outdoor

Location
Wet

Lifespan
50,000 hrs.

Certifications
ETL, FCC, ICES, ES IC, ASTM E283-04, T24

FT rating
FT6

Operating temperature
-20° to 40° C

WHAT'S IN THE BOX

LED recessed fixture
Junction box
Push-in wire connectors
Mounting hardware
Instruction sheet

ACCESSORIES

RFP-UNI
Universal Drilling Plate

RFP-46
Drilling Plate

ADAPTERS

REC-EXT108
108" extension cord for recessed fixtures

REC-EXT230
230" extension cord for recessed fixtures

Canada
80, de la Seigneurie blvd., E.
Blainville, Quebec J7C 4N1

U.S.A.
4383, NW 124th Ave.,
Coral Springs, Florida 33065

877.430.1818
info@dals.com
dals.com

ELECTRICAL DETAILS

Input voltage
108-135V

Output current
500mA

Power factor
99%

Driver type
Constant current

Output voltage
35V

LED model #
COB

THD harmonic distortion
<30%

Binning type
3 SDCM

FEATURES

Every fixture includes a junction box with an integrated driver

Superior LED performance and lifespan

Switch-selectable CCT: 2700K/ 3000 K/ 3500 K/ 4000 K/ 5000 K

Can be daisy chained

Smooth 360° wide spread

30° tilting, 360° rotation

WARRANTY

DALS offers a 5-year warranty from the date of purchase which covers repairs or replacement of defective parts of the housing, optics, and electronics. To contact DALS customer service call 1-877-430-1818 or send an e-mail to info@dals.com.

RECOMMENDED DIMMER LIST*

BRAND	MODEL #	DIMMER SPECS	GRADE	DIMMING RANGE (%)	MAX LOAD
Lutron	DVELV-300P-WH	300W electronic low voltage dimmer	Compatible	Min: 2 / Max: 61	15
Lutron	MA-PRO-WH	ELV, 250W LED/CFL	Compatible	Min: 1 / Max: 75	12
Lutron	Caseta PD-5NE-WH-C	ELV, LED—up to 250 W	Compatible	Min: 0 / Max: 73	12
Control 4	C4-APD120-WH	ELV, 120W LED	Compatible	Min: 0 / Max: 100	6

* Minimal buzzing noise may occur with some dimmers