USED ON	NEXT HIGHER ASSEMBLY
-	-

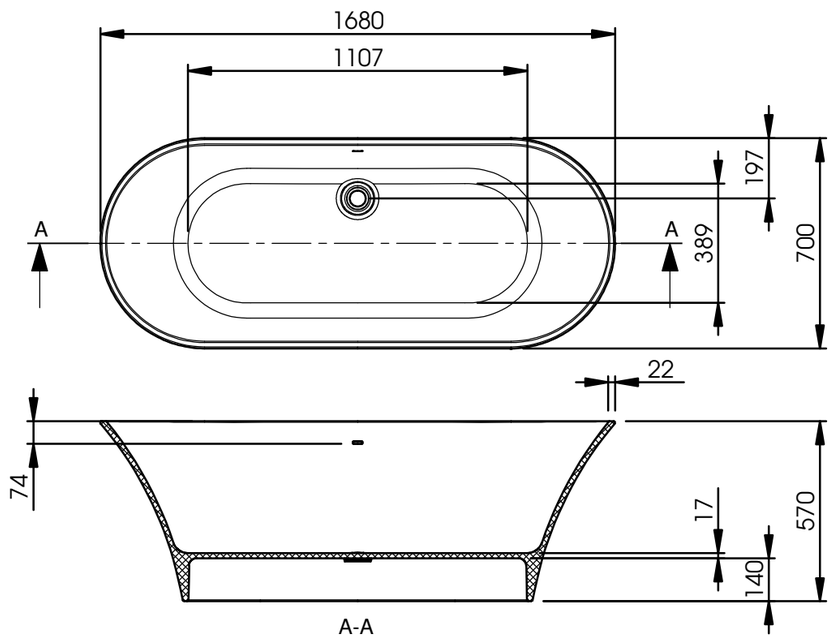

REV	DRAWN	DATE	PARTICULARS	ECP No
-			RELEASED	

SCALE: **1:20** ON **A3**

DO NOT SCALE, USE DIMENSIONS.
ALL DIMENSIONS ARE IN mm

RESTRICTED

BC Designs

FINAL APPR		
APPROVED		
APPROVED		
CHECKED		
DRAWN	HS	30/07/13

MATL:

WEIGHT = 89 kg

TITLE: **VERDICIO BATH**

SUB TITLE:

CAD No:

DRAWING No:

1/1

Rev: -