Giorgio2 Series

Offset Quadrant Shower Tray 1000 x 800mm
Left Hand

tissino

Designed to Inspire
Made to Experience

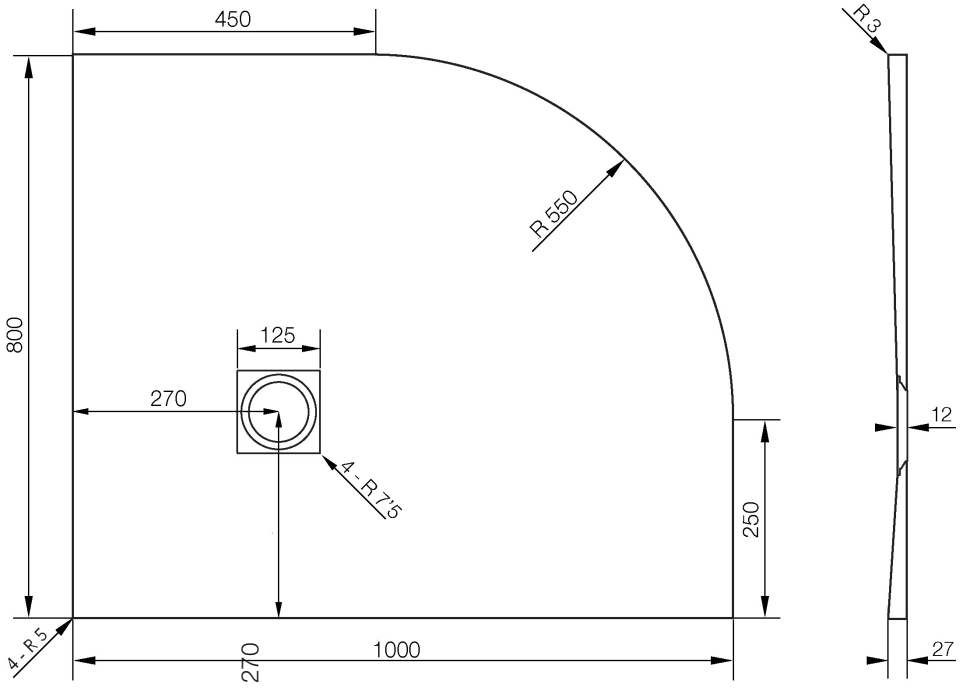

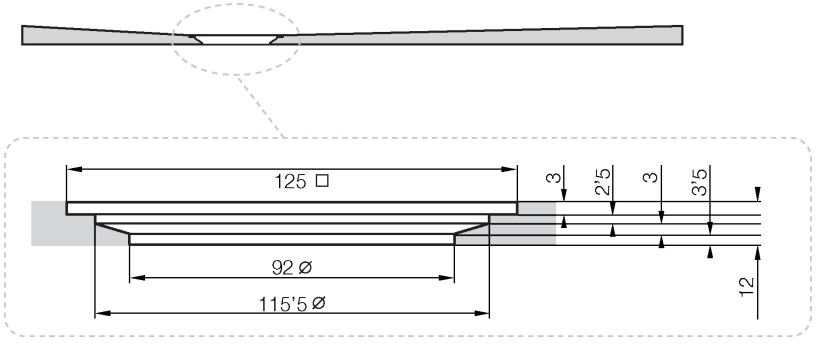

TRG-701-MN Black Slate
TRG-701-RS Graphite Slate
TRG-701-GS Grey Slate
TRG-701-WS White Slate

tissino

T 0345 582 8000
E info@tissino.co.uk
W tissino.co.uk

2 Lyncastle Road
Appleton Thorn
Warrington WA4 4SN

We reserve the right to change this information without prior notice