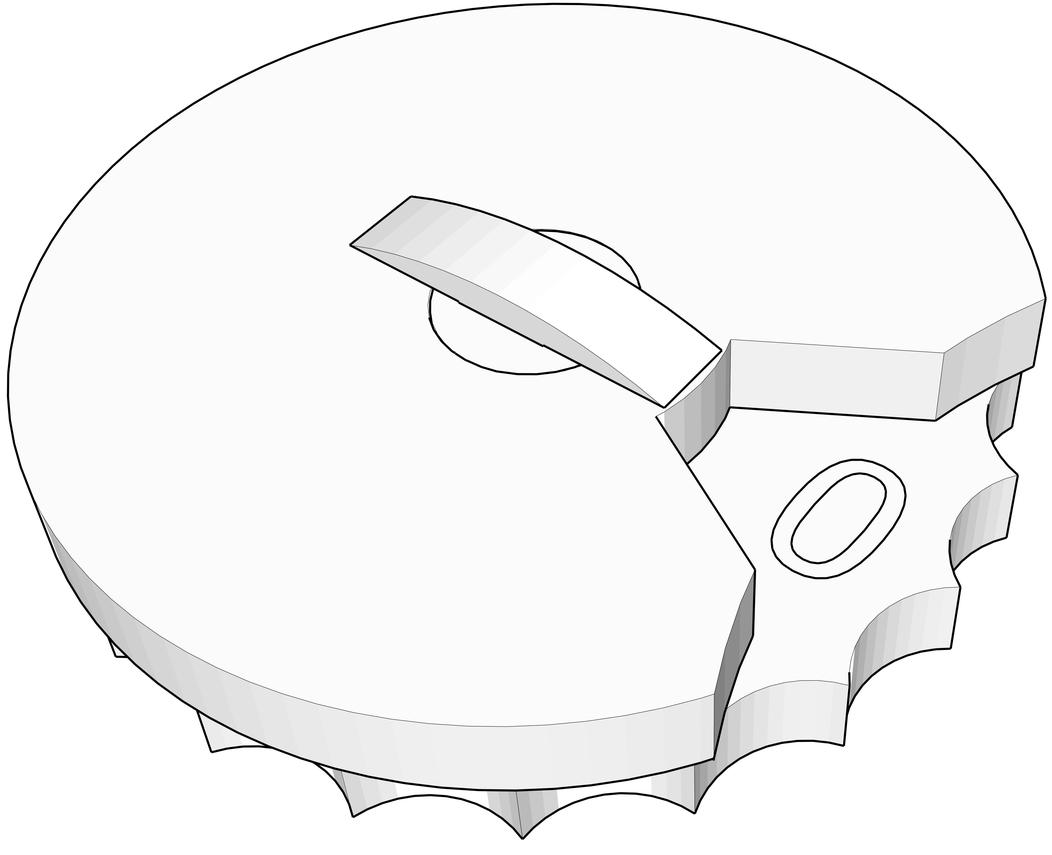

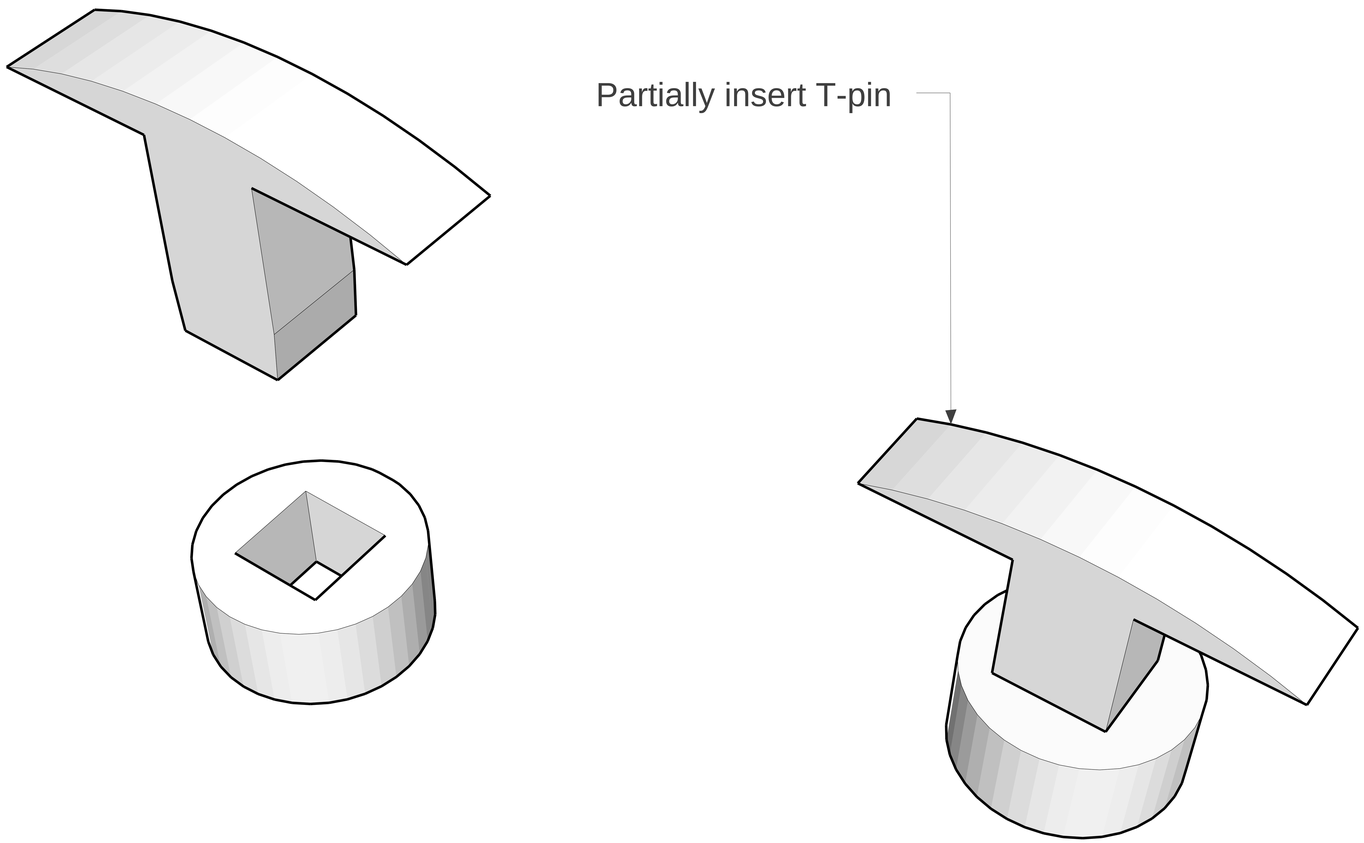
Partially insert T-pin

CAUTION: T-pins are fragile and can be extremely difficult to remove once seated.

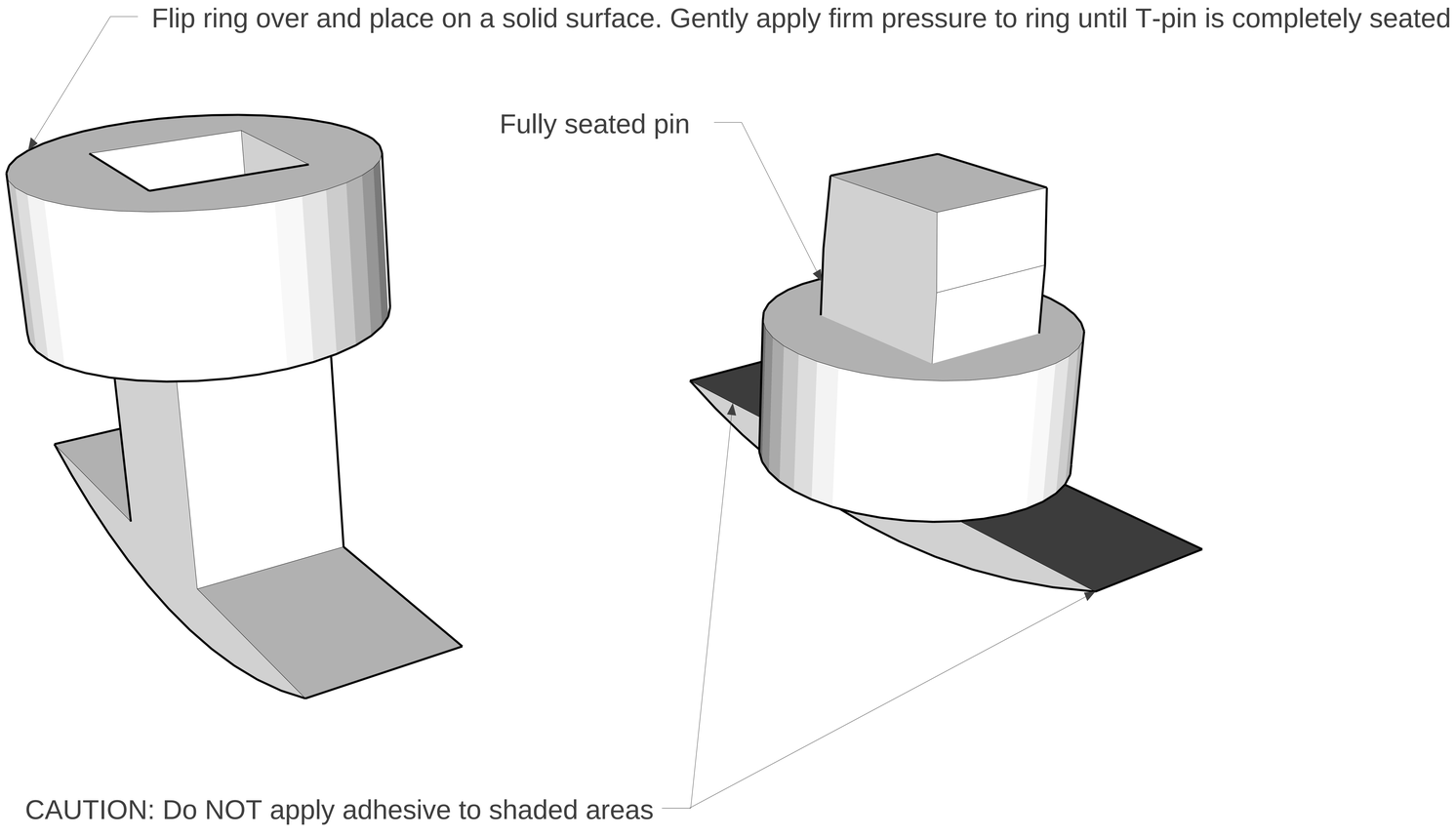

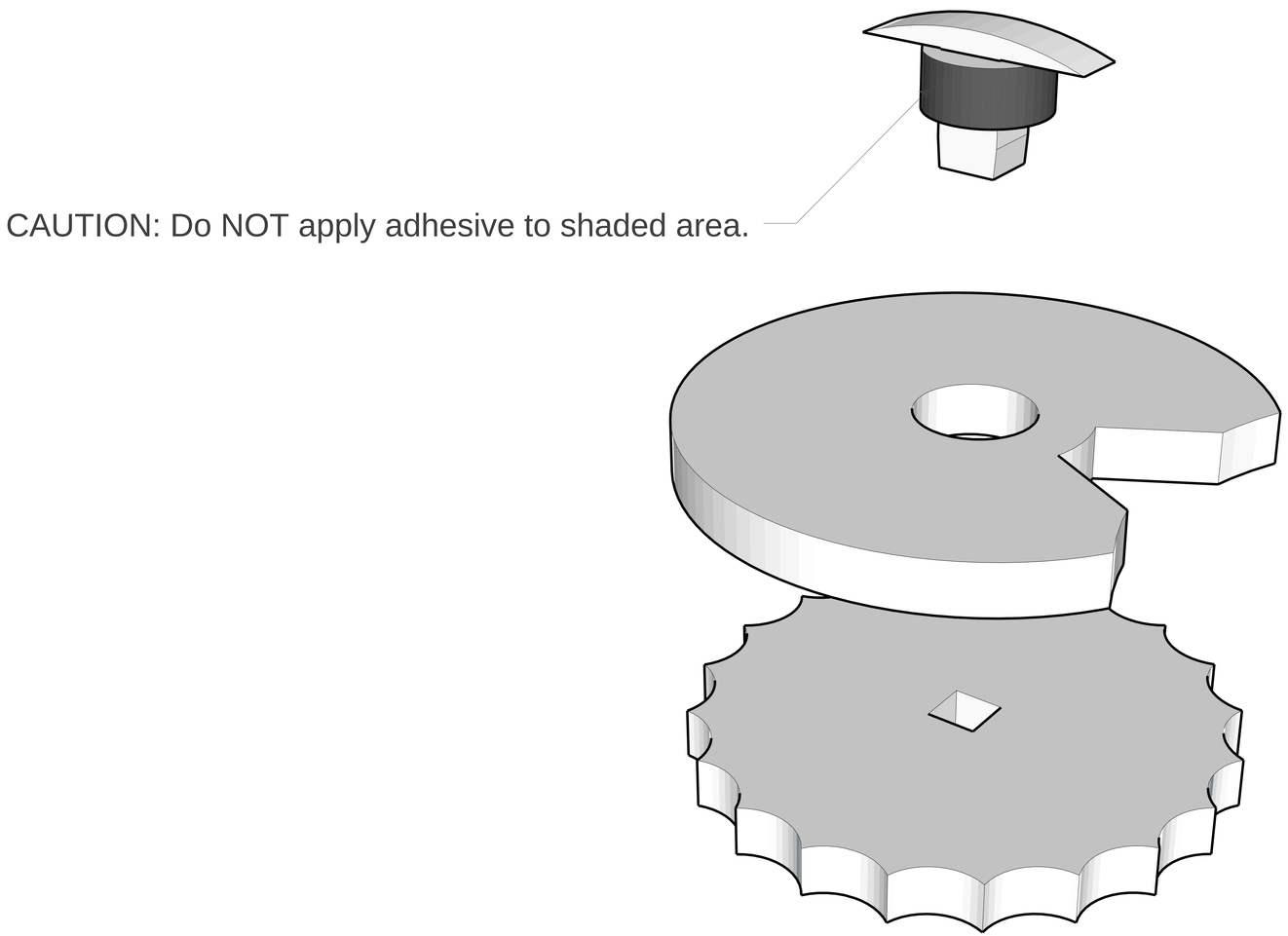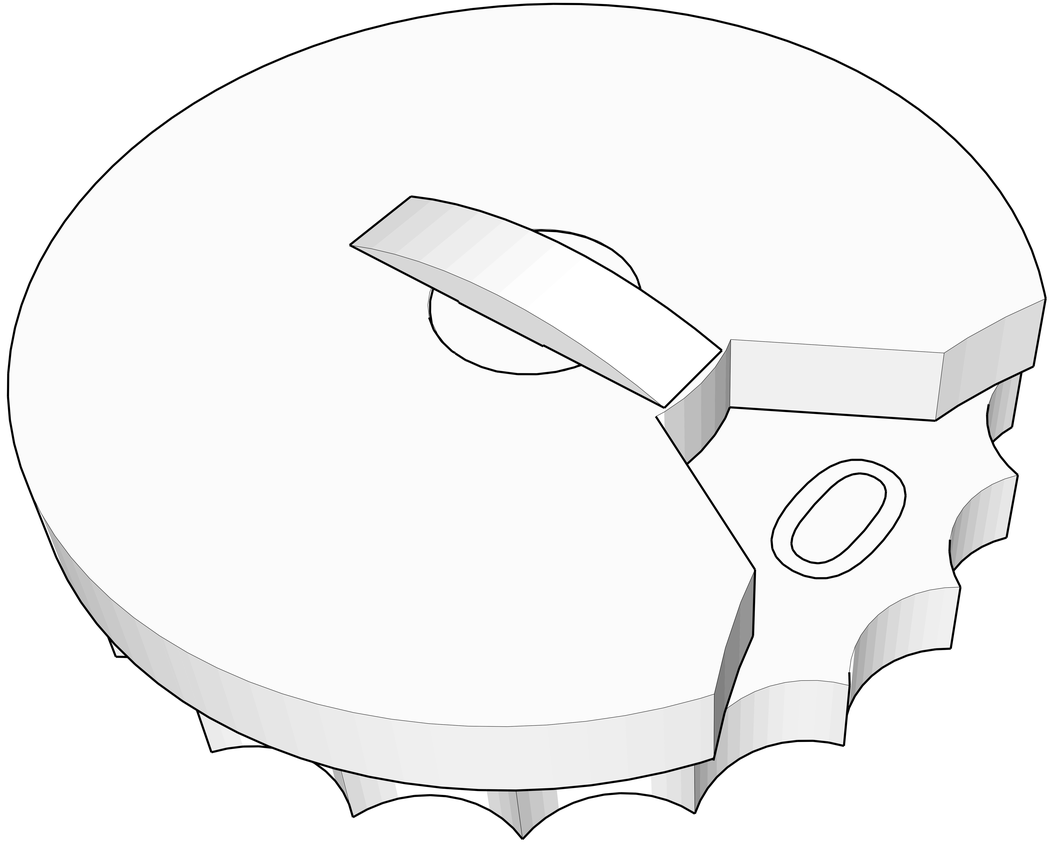
CAUTION: Do NOT apply adhesive to shaded area.