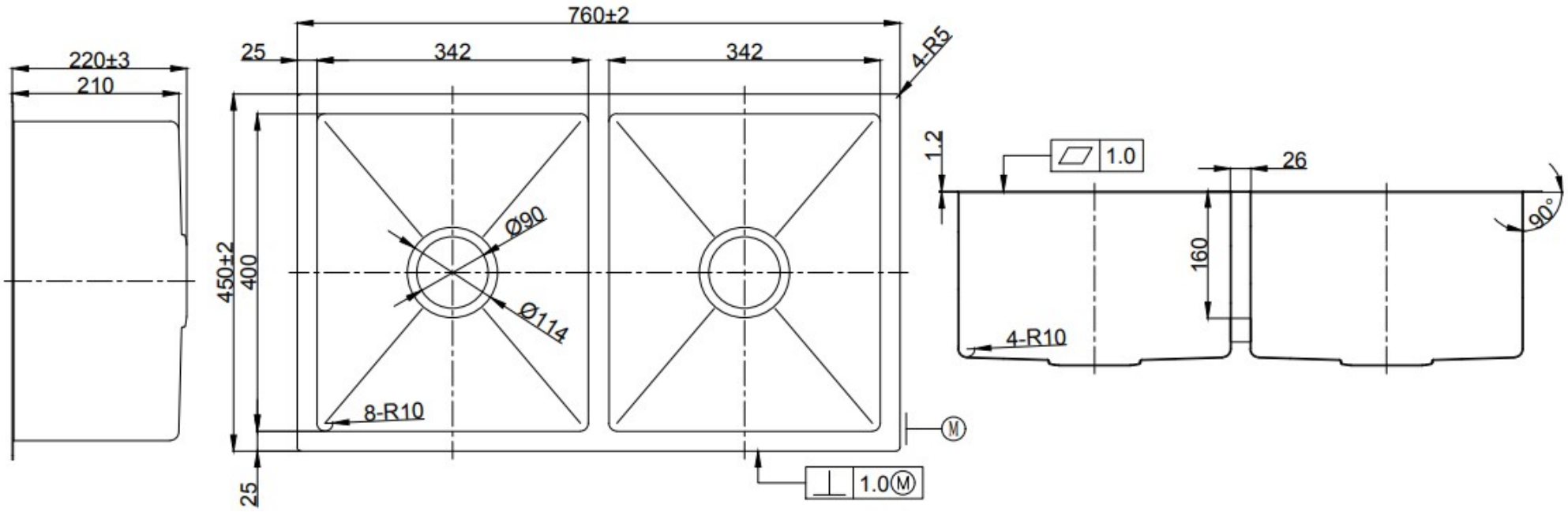

STAINLESS STEEL

GUN METAL BLACK (GMB)

CODE	LS-HZ-SINK-76
DESCRIPTION	HAZEL DOUBLE BOWL SINK
SIZE	760W x 450D x 220H mm
FEATURES	NANO GLAZE SCRATCH RESISTANT

NB: Drawings are not to scale—they are to assist only.
All measurements are nominal and are subject to