CODE:	BT-VG1700L / BT-VG1700R
SUPPLIER:	CASSA DESIGN
SIZE:	1700L x 800D x 580H mm
TYPE:	CORNER BATH

JNK | BATHROOM, PLUMBING & KITCHEN SUPPLIES

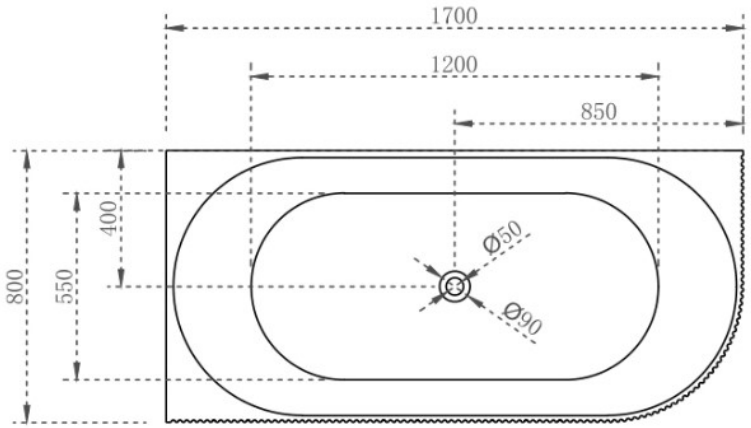

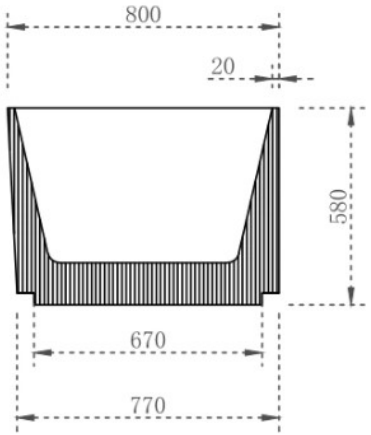

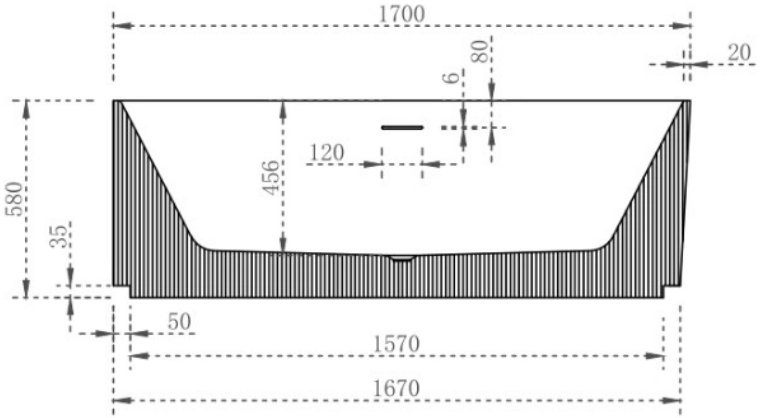

NB: Drawings are not to scale—they are to assist only. All measurements are nominal and are subject to change.