HAMILTON SINKLER

Smart Lock Mortise Template

SM159E: Smart Lock

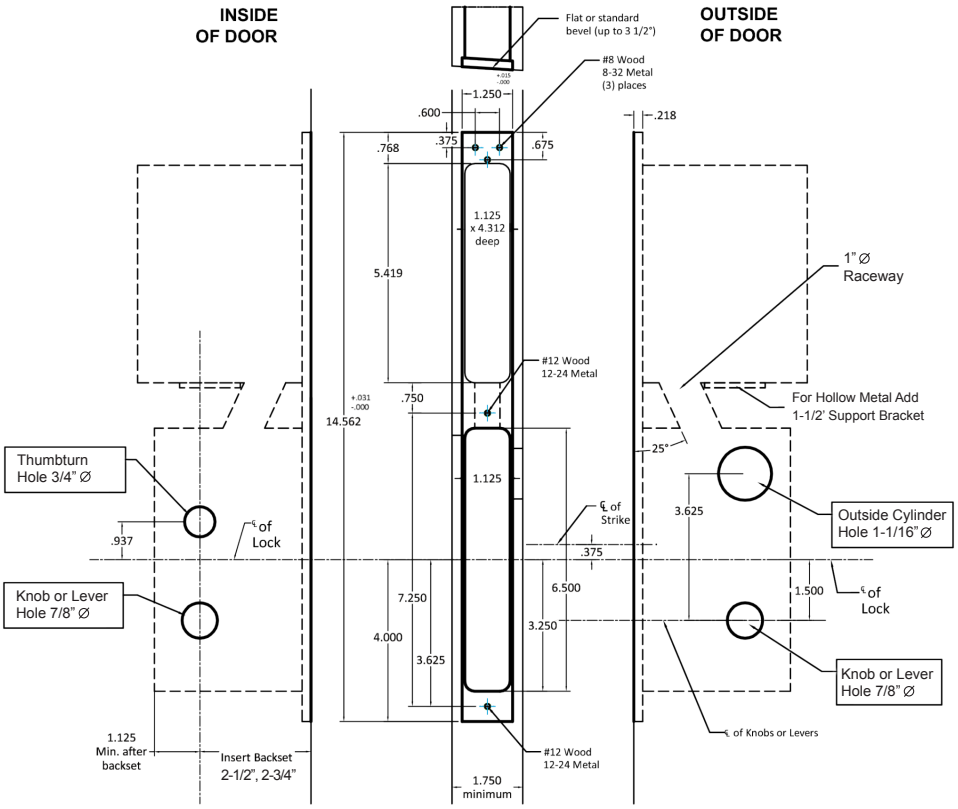

Note: Responsibility - Door and frame manufactures are responsible for providing adequate construction or re-inforcement for proper installation of hardware shown.

Strike with Dust Box

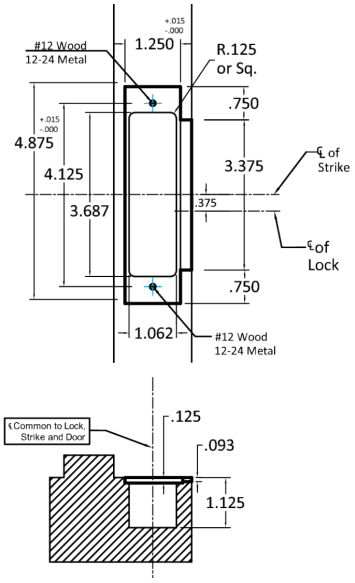

info@hamiltonsinkler.com
www.hamiltonsinkler.com

Tel: 212-760-3377