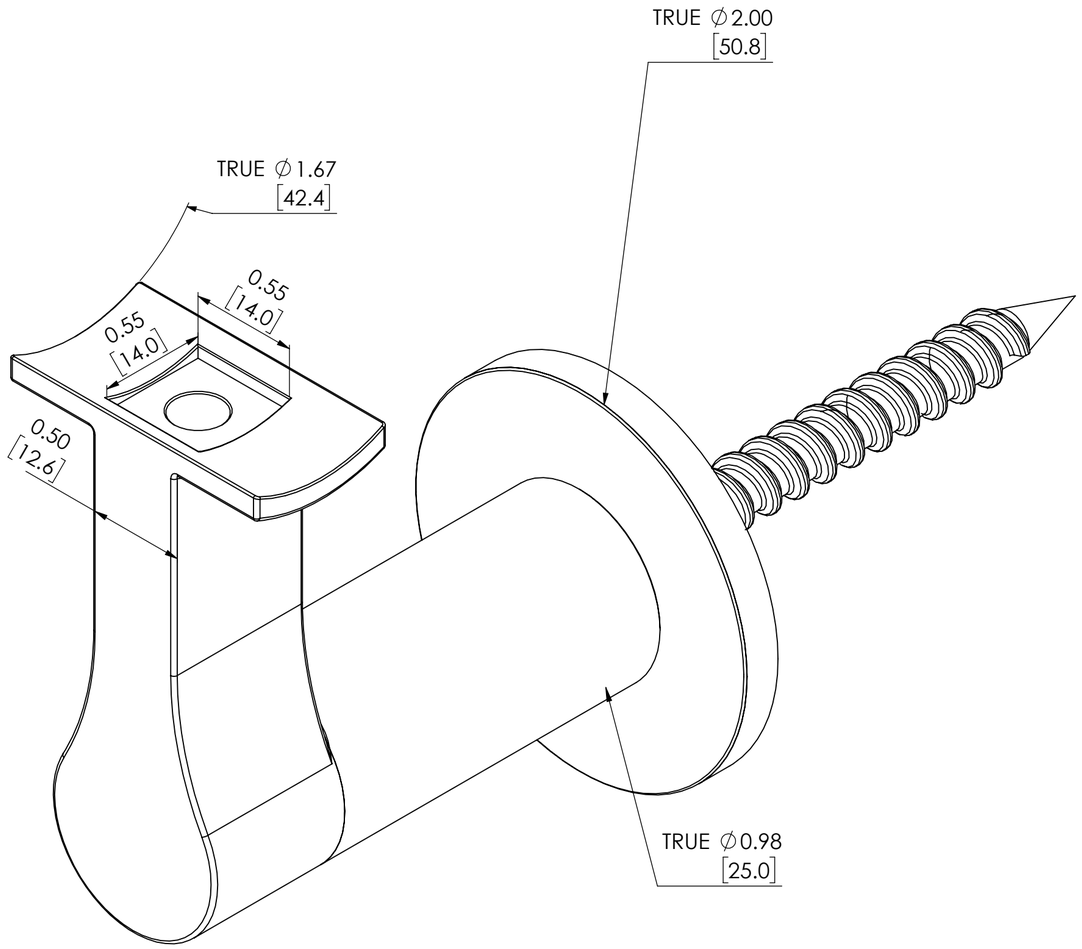

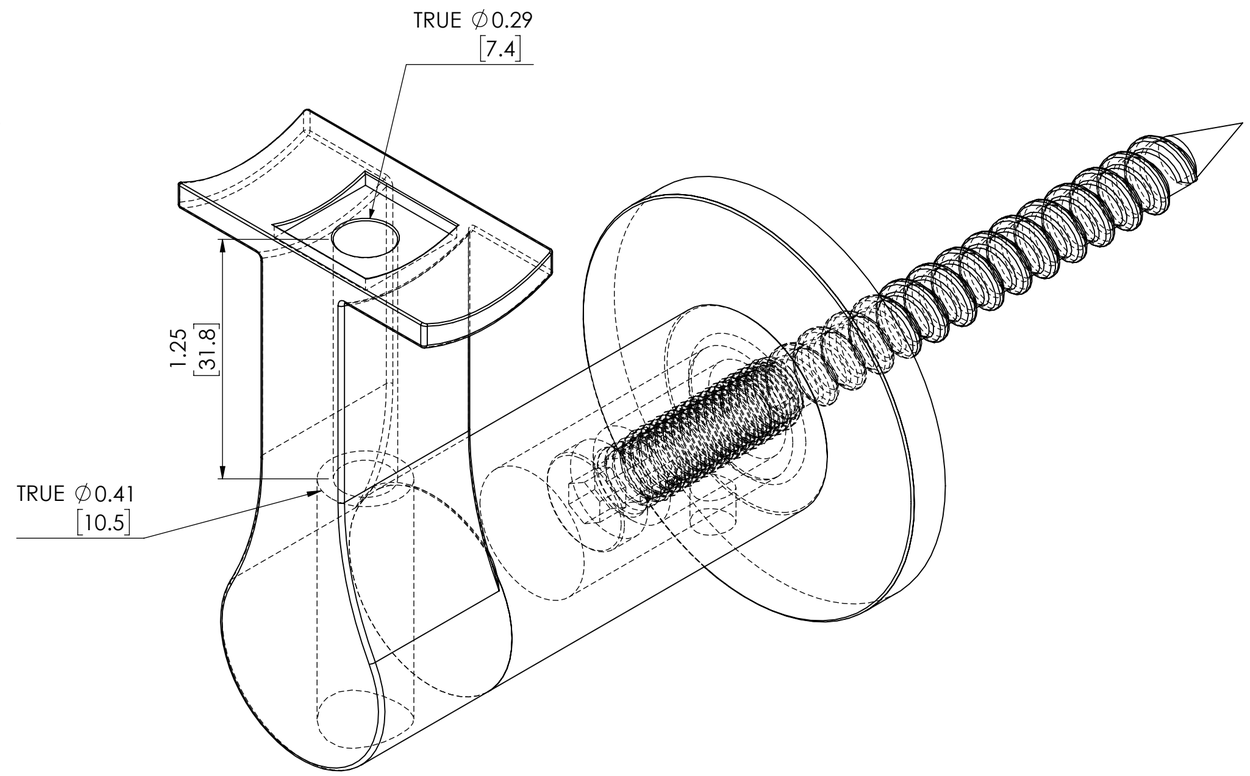

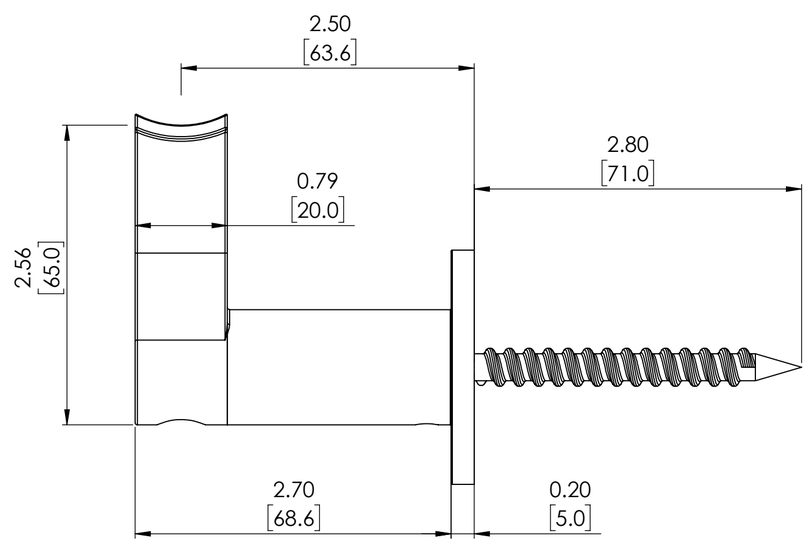

Inline Design

HANDRAIL BRACKET ROUND SLIM

SKU: HBWA.006

UNITS: INCHES/[MM]

PROPRIETARY AND COPYRIGHT

THE INFORMATION CONTAINED IN THIS DRAWING IS THE SOLE PROPERTY OF INLINE DESIGN. ANY REPRODUCTION IN PART OR AS A WHOLEWITHOUT THE WRITTEN PERMISSION OF INLINE DESIGN IS PROHIBITED

REVISION: 1.02