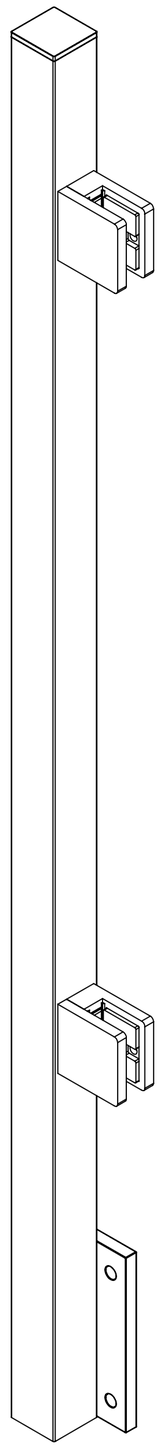

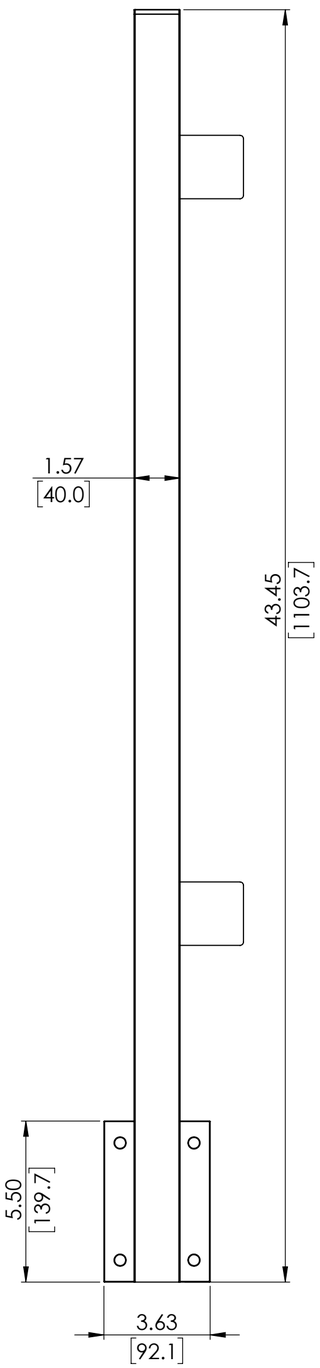

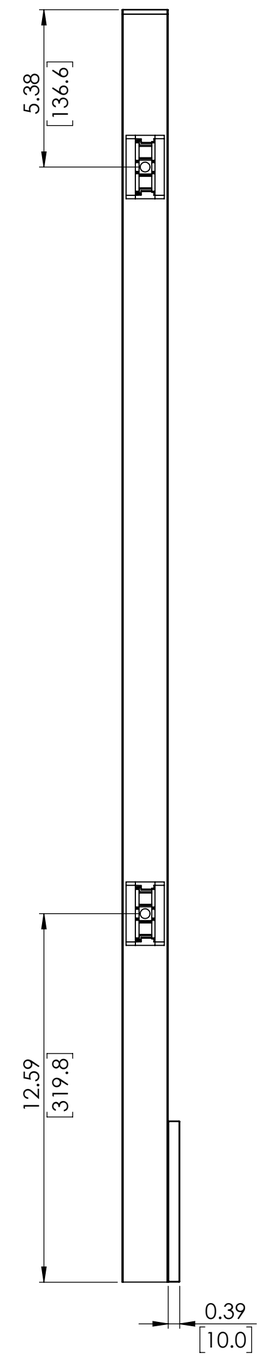

Inline Design

36" GLASS FASCIA MOUNT SQUARE END POST

SKU: FSQU.SGC.36.END

UNITS: INCHES/[MM]

PROPRIETARY AND COPYRIGHT

THE INFORMATION CONTAINED IN THIS DRAWING IS THE SOLE PROPERTY OF INLINE DESIGN. ANY REPRODUCTION IN PART OR AS A WHOLEWITHOUT THE WRITTEN PERMISSION OF INLINE DESIGN IS PROHIBITED

REVISION: 1.01

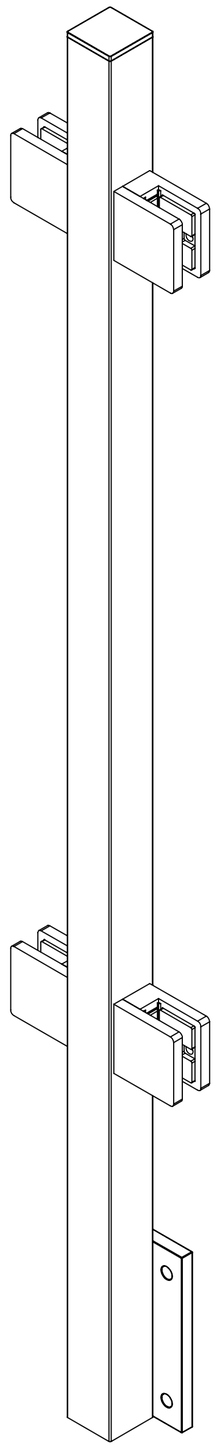

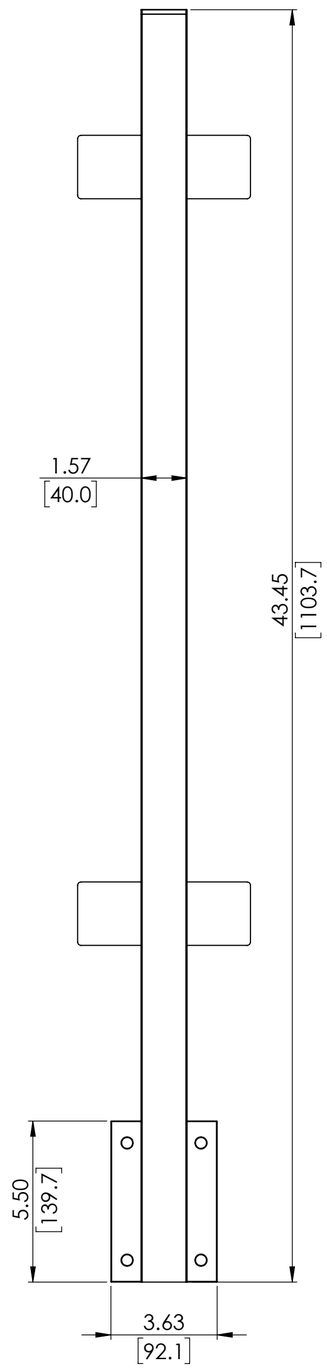

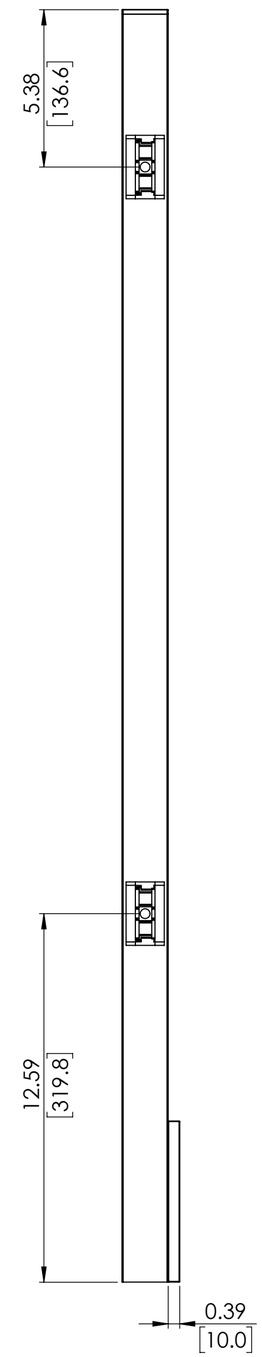

Inline Design

36" GLASS FASCIA MOUNT SQUARE MIDDLE POST

SKU: FSQU.SGC.36.MID

UNITS: INCHES/[MM]

PROPRIETARY AND COPYRIGHT

THE INFORMATION CONTAINED IN THIS DRAWING IS THE SOLE PROPERTY OF INLINE DESIGN. ANY REPRODUCTION IN PART OR AS A WHOLEWITHOUT THE WRITTEN PERMISSION OF INLINE DESIGN IS PROHIBITED

REVISION: 1.01

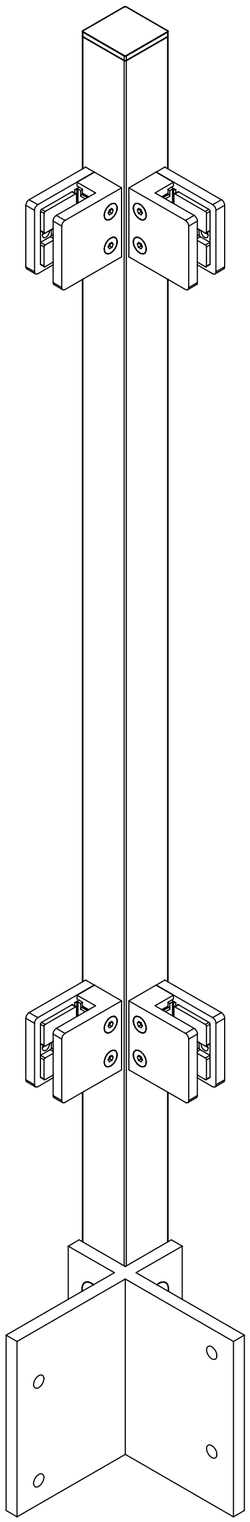

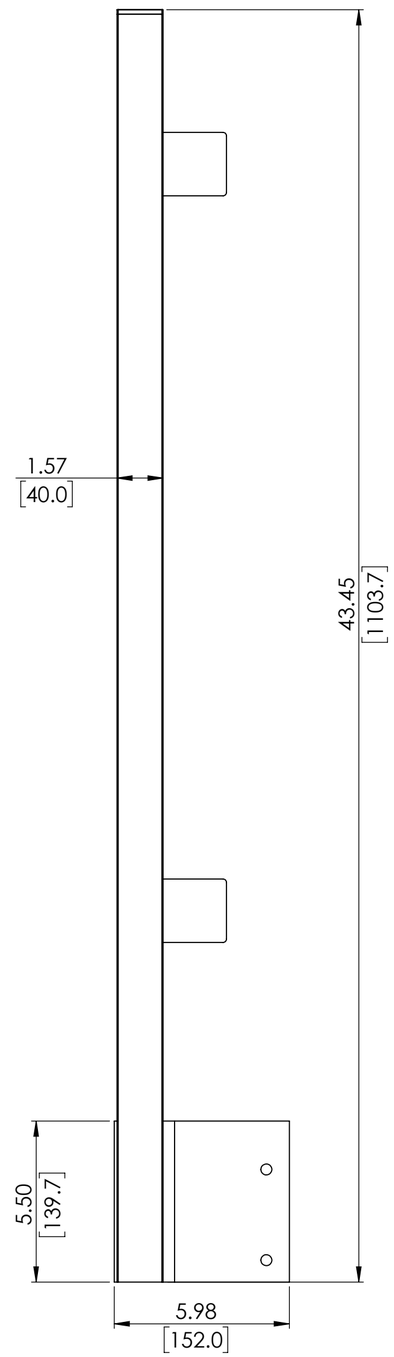

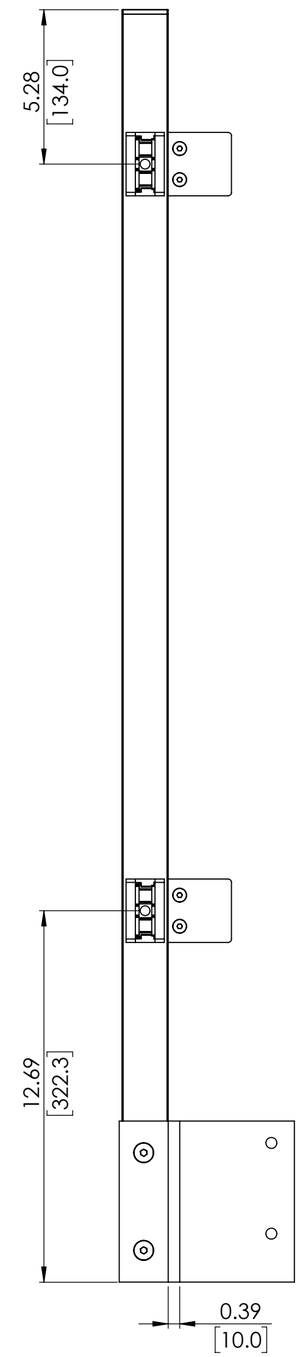

Inline Design

36" GLASS FASCIA MOUNT SQUARE OUTSIDE CORNER POST

SKU: FSQU.SGC.36.CRN.O

UNITS: INCHES/[MM]

PROPRIETARY AND COPYRIGHT

THE INFORMATION CONTAINED IN THIS DRAWING IS THE SOLE PROPERTY OF INLINE DESIGN. ANY REPRODUCTION IN PART OR AS A WHOLEWITHOUT THE WRITTEN PERMISSION OF INLINE DESIGN IS PROHIBITED

REVISION: 1.01

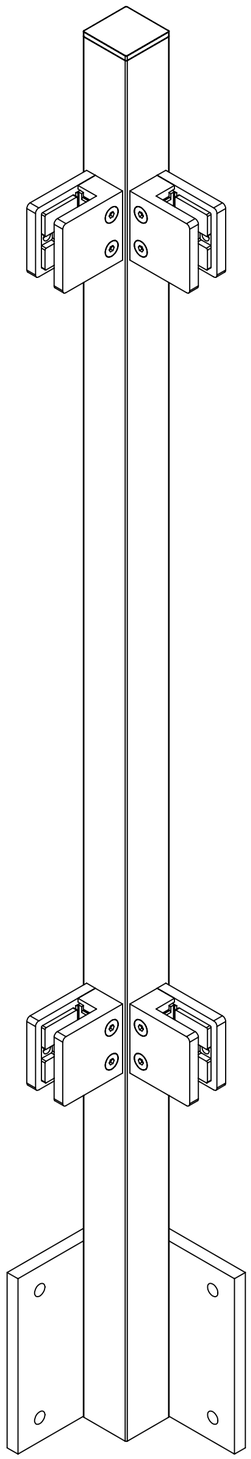

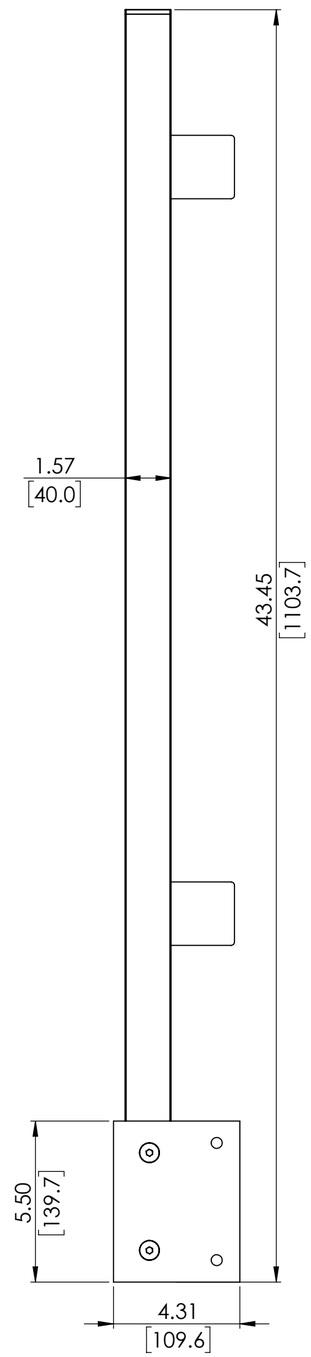

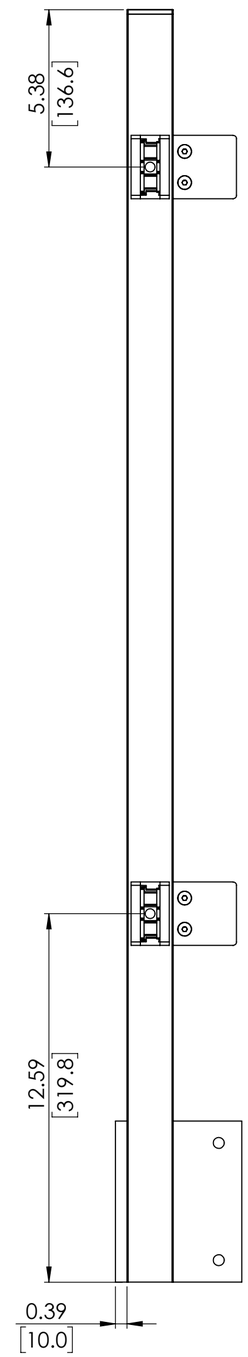

Inline Design

36" GLASS FASCIA MOUNT SQUARE INSIDE CORNER POST

SKU: FSQU.SGC.36.CRN.I

UNITS: INCHES/[MM]

PROPRIETARY AND COPYRIGHT

THE INFORMATION CONTAINED IN THIS DRAWING IS THE SOLE PROPERTY OF INLINE DESIGN. ANY REPRODUCTION IN PART OR AS A WHOLEWITHOUT THE WRITTEN PERMISSION OF INLINE DESIGN IS PROHIBITED

REVISION: 1.01

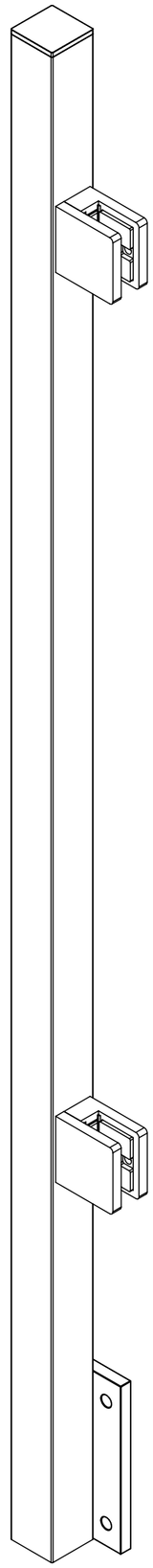

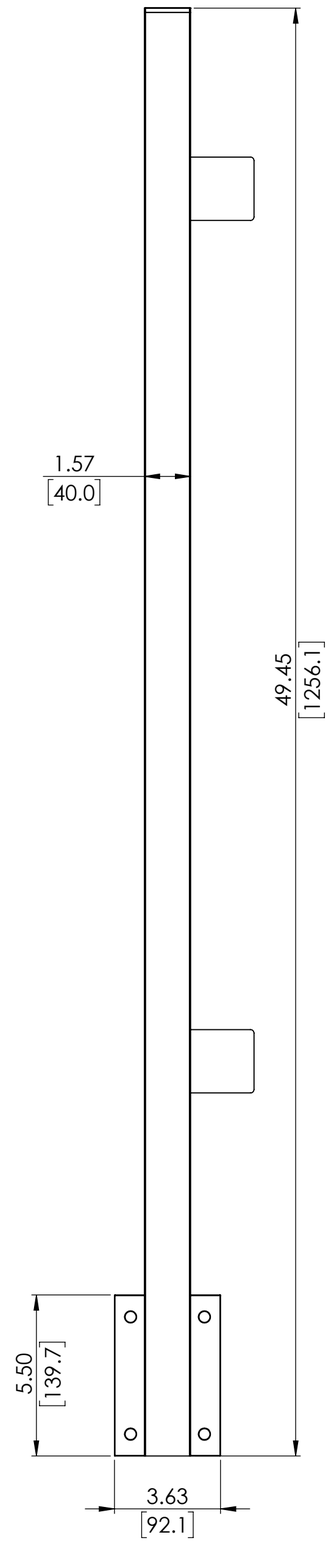

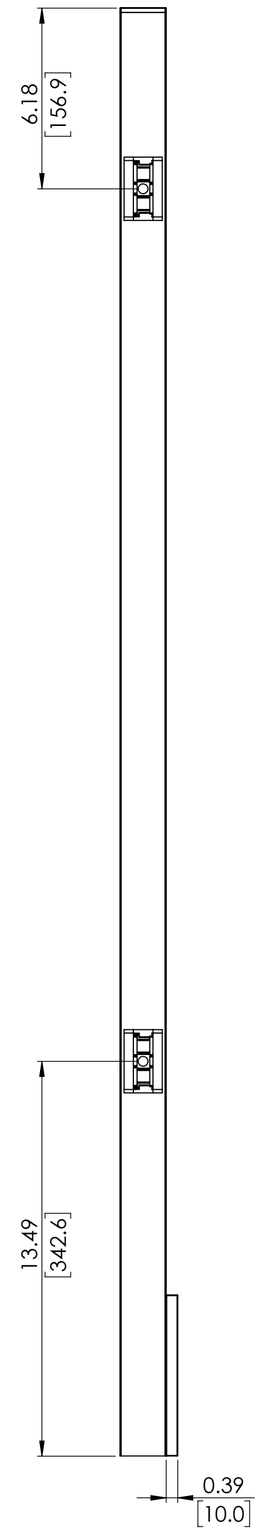

Inline Design

42" GLASS FASCIA MOUNT SQUARE END POST

SKU: FSQU.SGC.42.END

UNITS: INCHES/[MM]

PROPRIETARY AND COPYRIGHT

THE INFORMATION CONTAINED IN THIS DRAWING IS THE SOLE PROPERTY OF INLINE DESIGN. ANY REPRODUCTION IN PART OR AS A WHOLEWITHOUT THE WRITTEN PERMISSION OF INLINE DESIGN IS PROHIBITED

REVISION: 1.01

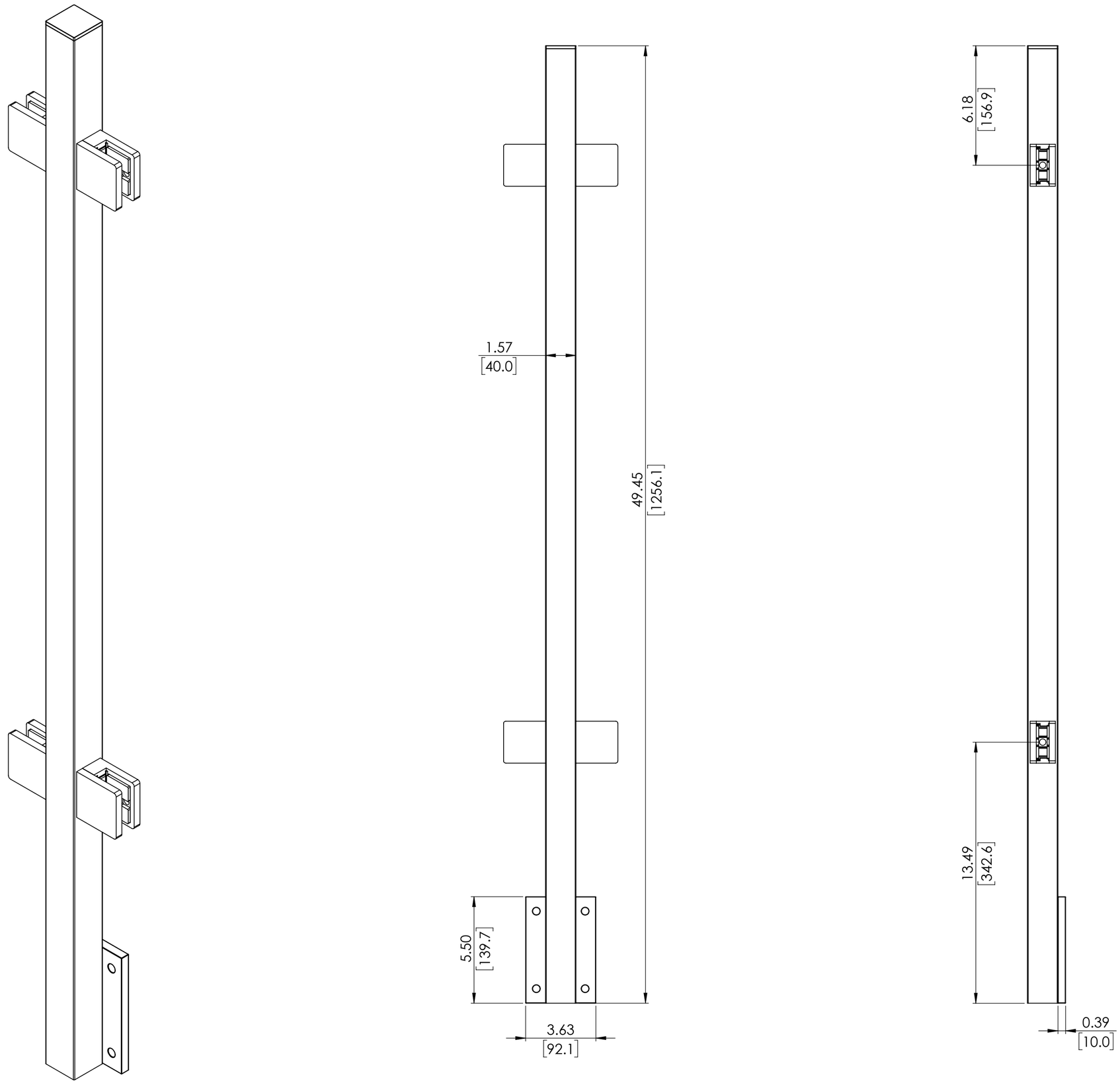

Inline Design

42" GLASS FASCIA MOUNT SQUARE MIDDLE POST

SKU: FSQU.SGC.42.MID

UNITS: INCHES/[MM]

PROPRIETARY AND COPYRIGHT

THE INFORMATION CONTAINED IN THIS DRAWING IS THE SOLE PROPERTY OF INLINE DESIGN. ANY REPRODUCTION IN PART OR AS A WHOLEWITHOUT THE WRITTEN PERMISSION OF INLINE DESIGN IS PROHIBITED

REVISION: 1.01

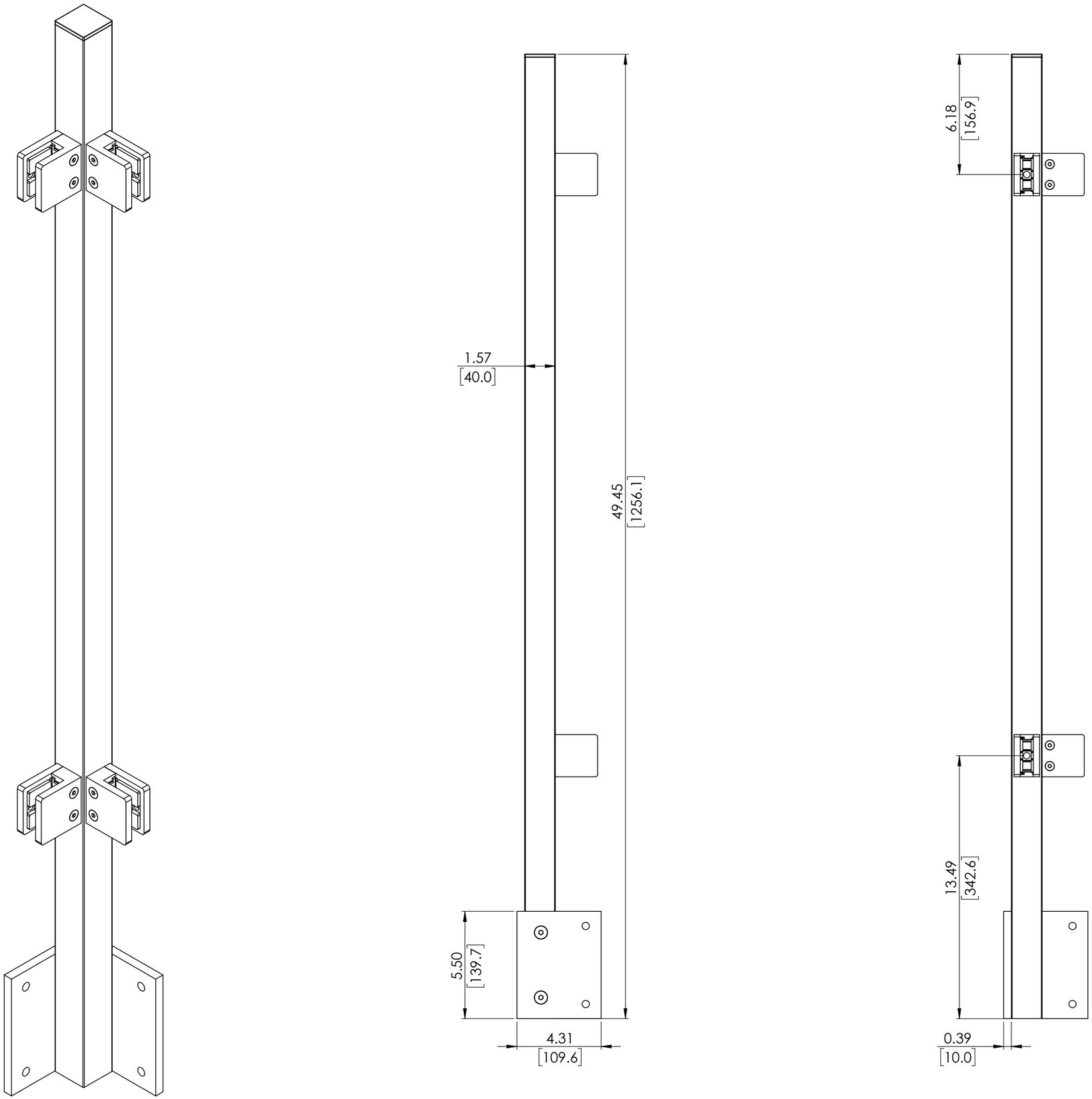

Inline Design

42" GLASS FASCIA MOUNT SQUARE INSIDE CORNER POST

SKU: FSQU.SGC.42.CRN.I

UNITS: INCHES/[MM]

PROPRIETARY AND COPYRIGHT

THE INFORMATION CONTAINED IN THIS DRAWING IS THE SOLE PROPERTY OF INLINE DESIGN. ANY REPRODUCTION IN PART OR AS A WHOLEWITHOUT THE WRITTEN PERMISSION OF INLINE DESIGN IS PROHIBITED

REVISION: 1.01

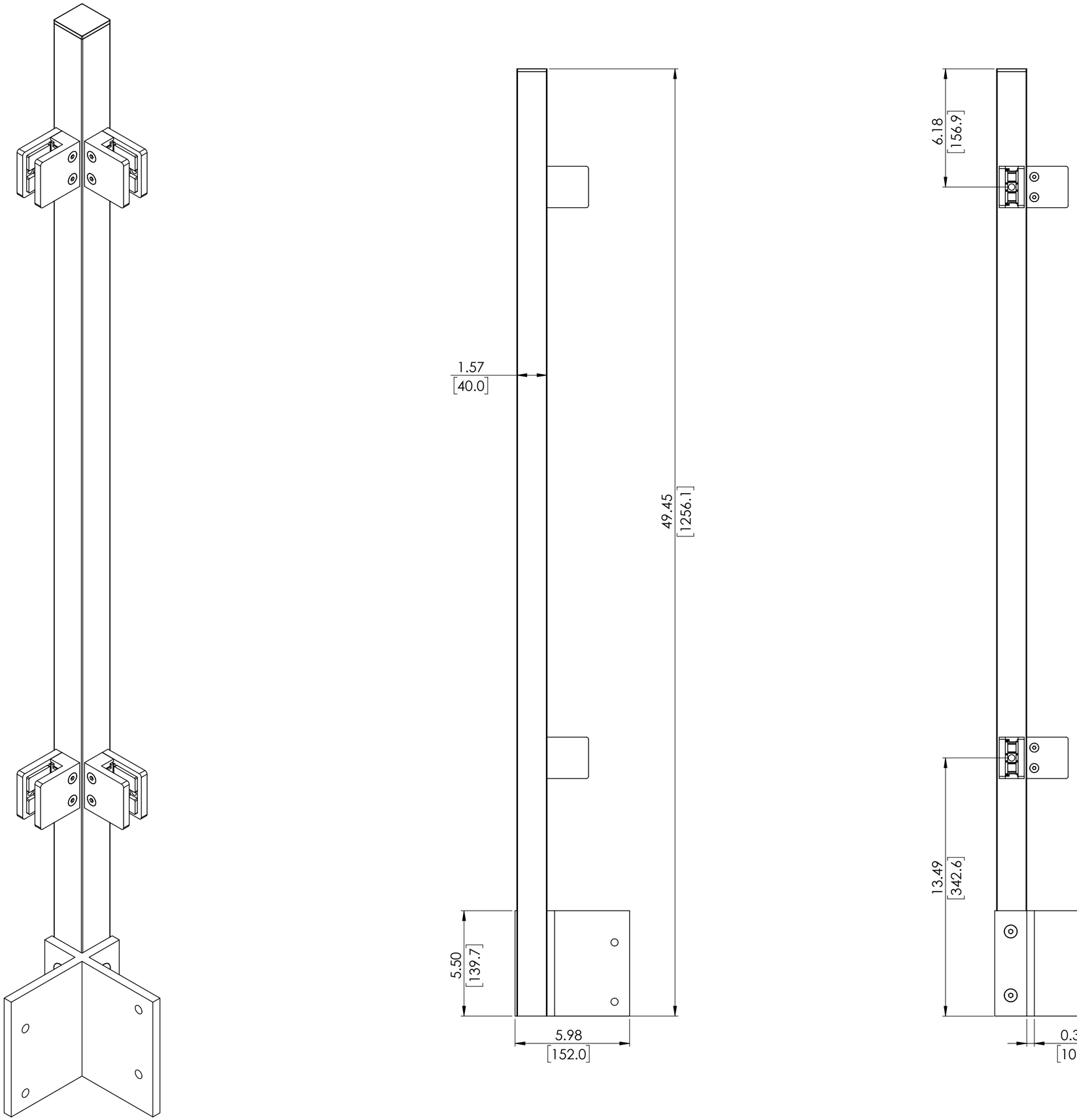

Inline Design

42" GLASS FASCIA MOUNT SQUARE OUTSIDE CORNER POST

SKU: FSQU.SGC.42.CRN.O

UNITS: INCHES/[MM]

PROPRIETARY AND COPYRIGHT

THE INFORMATION CONTAINED IN THIS DRAWING IS THE SOLE PROPERTY OF INLINE DESIGN. ANY REPRODUCTION IN PART OR AS A WHOLEWITHOUT THE WRITTEN PERMISSION OF INLINE DESIGN IS PROHIBITED

REVISION: 1.01