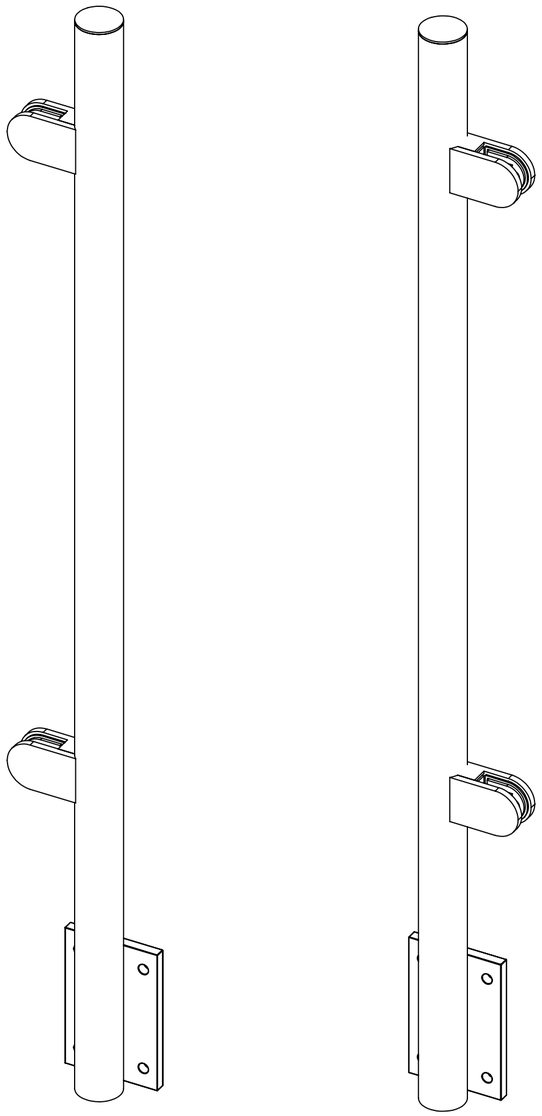

LEFT

RIGHT

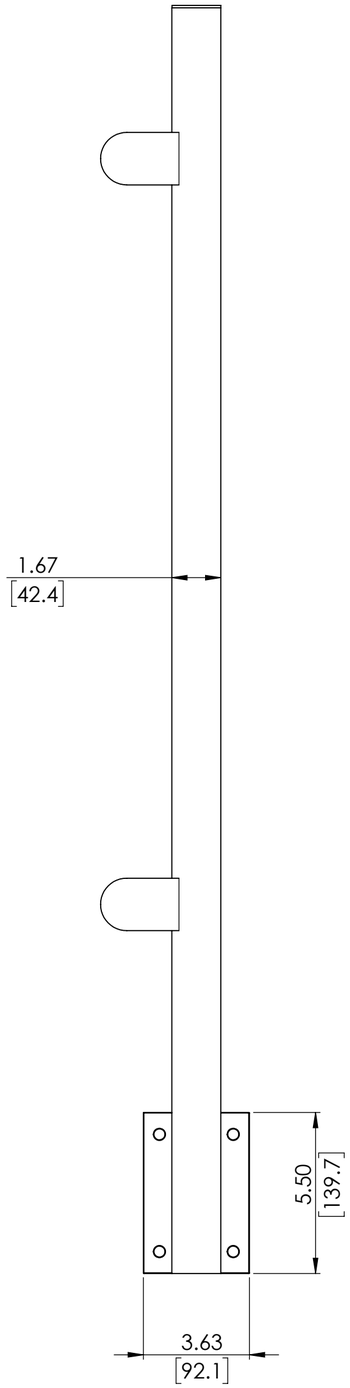

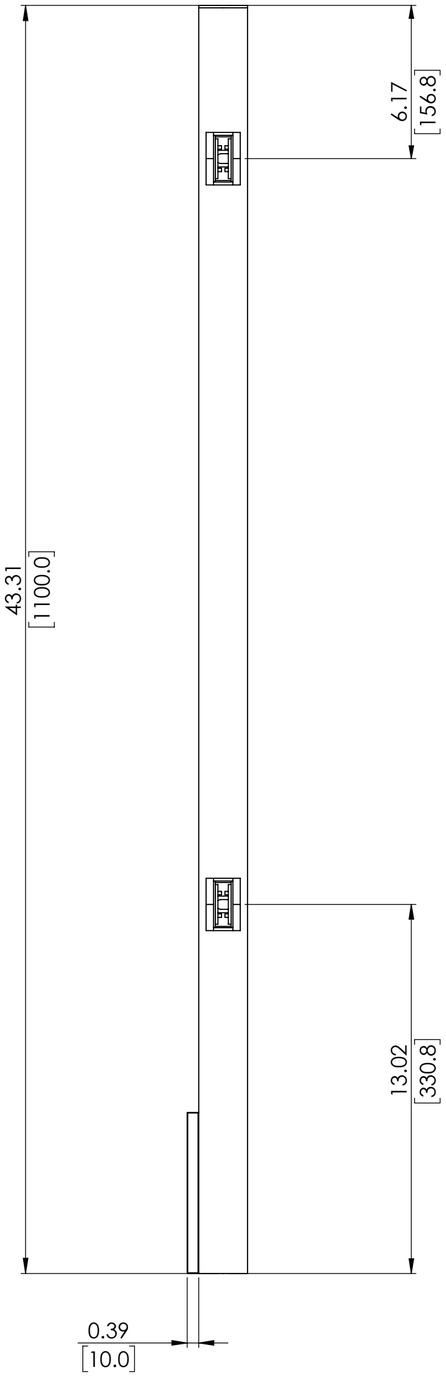

Inline Design

36" GLASS FASCIA MOUNT ROUND END POST

SKU: FRND.RGC.36.END

UNITS: INCHES/[MM]

PROPRIETARY AND COPYRIGHT

THE INFORMATION CONTAINED IN THIS DRAWING IS THE SOLE PROPERTY OF INLINE DESIGN. ANY REPRODUCTION IN PART OR AS A WHOLEWITHOUT THE WRITTEN PERMISSION OF INLINE DESIGN IS PROHIBITED

REVISION: 1.01

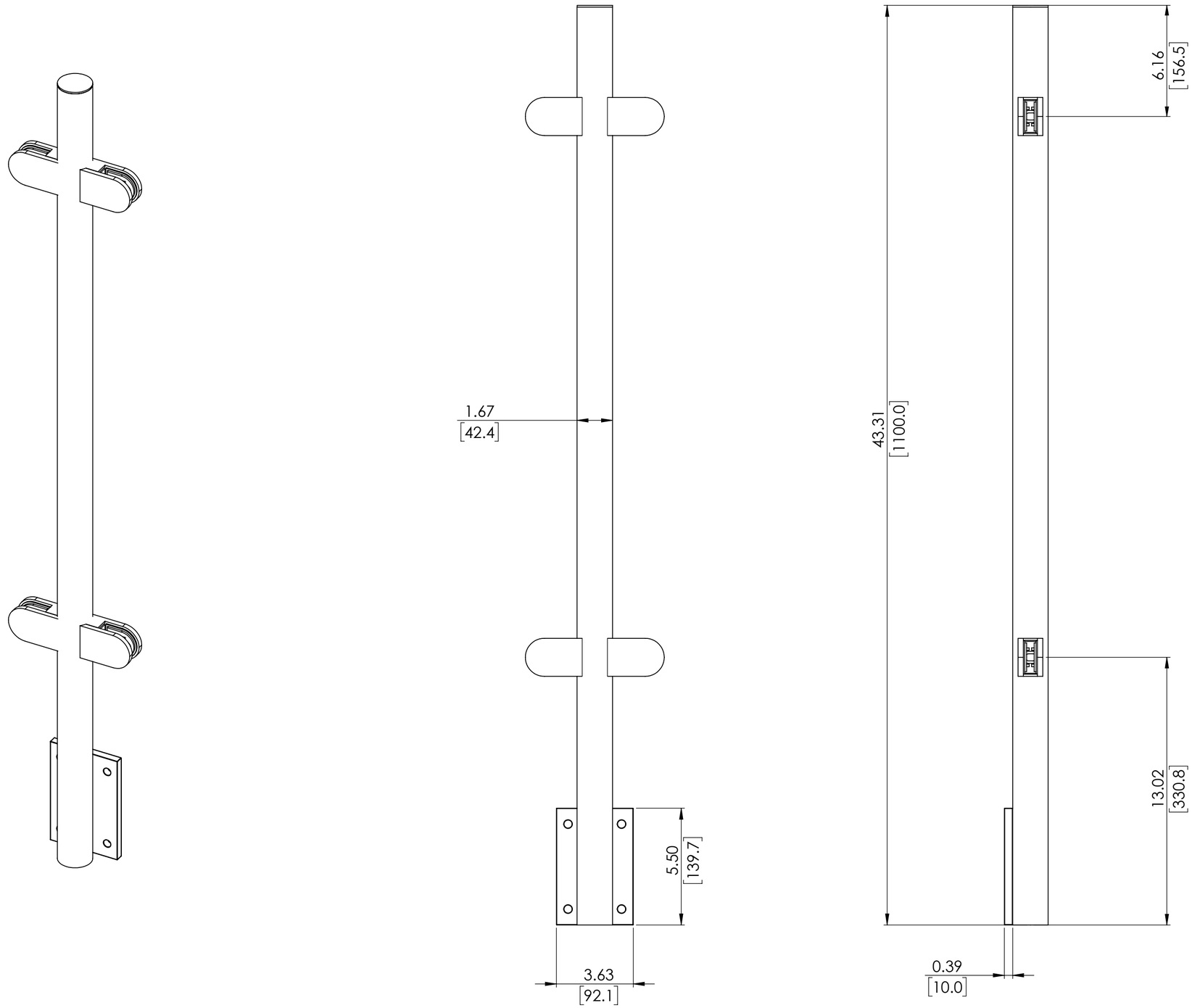

Inline Design

36" GLASS FASCIA MOUNT ROUND MIDDLE POST

SKU: FRND.RGC.36.MID

UNITS: INCHES/[MM]

PROPRIETARY AND COPYRIGHT

THE INFORMATION CONTAINED IN THIS DRAWING IS THE SOLE PROPERTY OF INLINE DESIGN. ANY REPRODUCTION IN PART OR AS A WHOLEWITHOUT THE WRITTEN PERMISSION OF INLINE DESIGN IS PROHIBITED

REVISION: 1.01

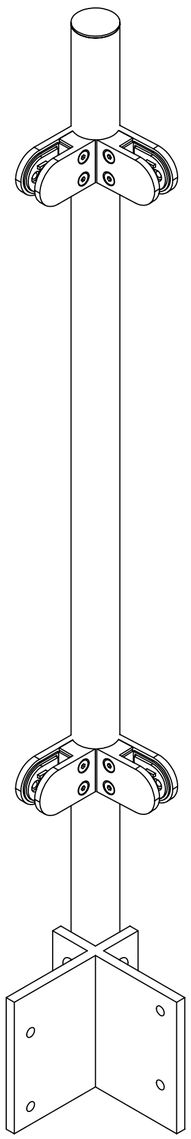

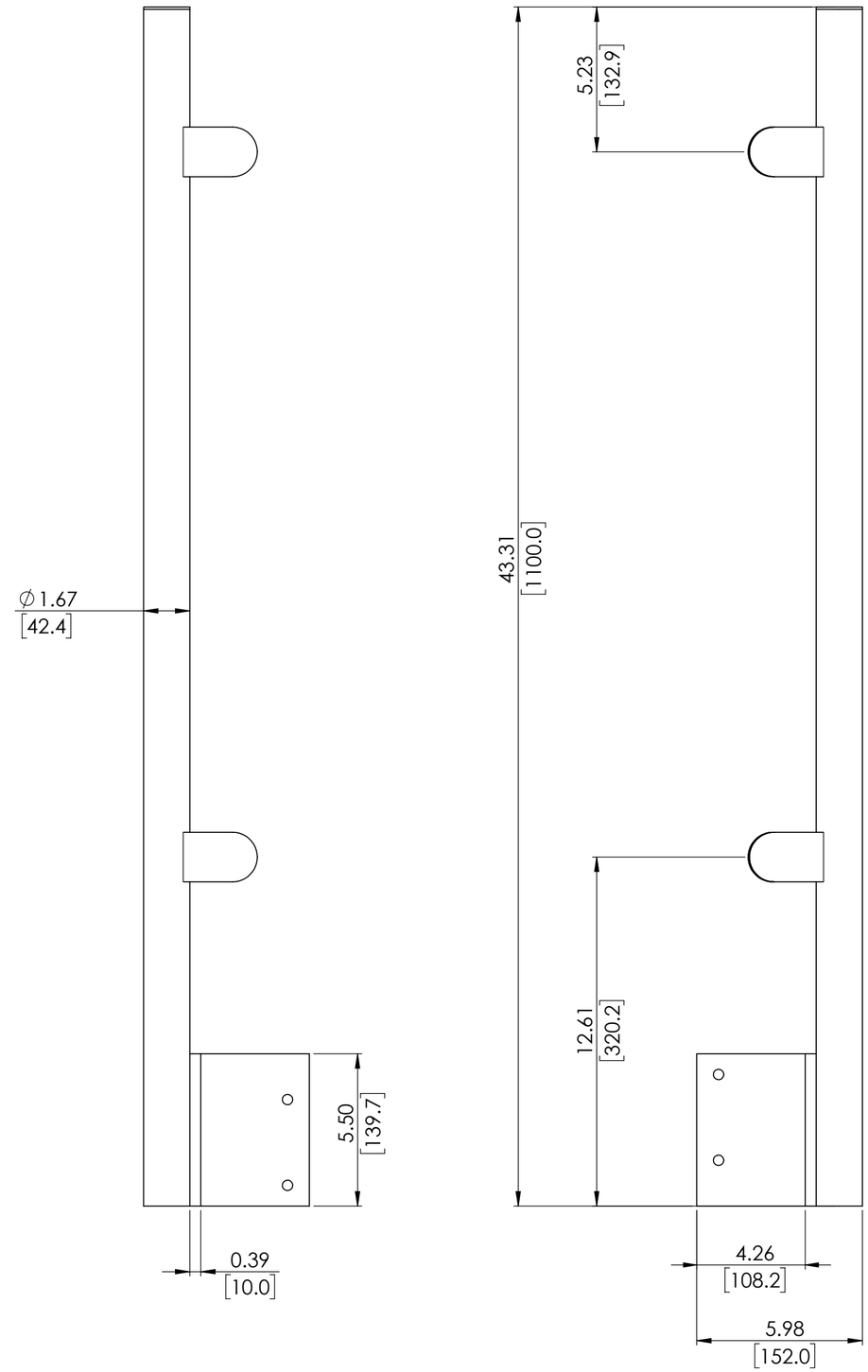

Inline Design

36" GLASS FASCIA MOUNT ROUND OUTSIDE CORNER POST

SKU: FRND.RGC.36.CRN.O

UNITS: INCHES/[MM]

PROPRIETARY AND COPYRIGHT

THE INFORMATION CONTAINED IN THIS DRAWING IS THE SOLE PROPERTY OF INLINE DESIGN. ANY REPRODUCTION IN PART OR AS A WHOLEWITHOUT THE WRITTEN PERMISSION OF INLINE DESIGN IS PROHIBITED

REVISION: 1.01

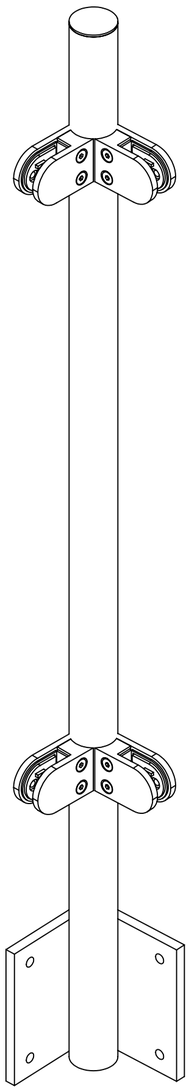

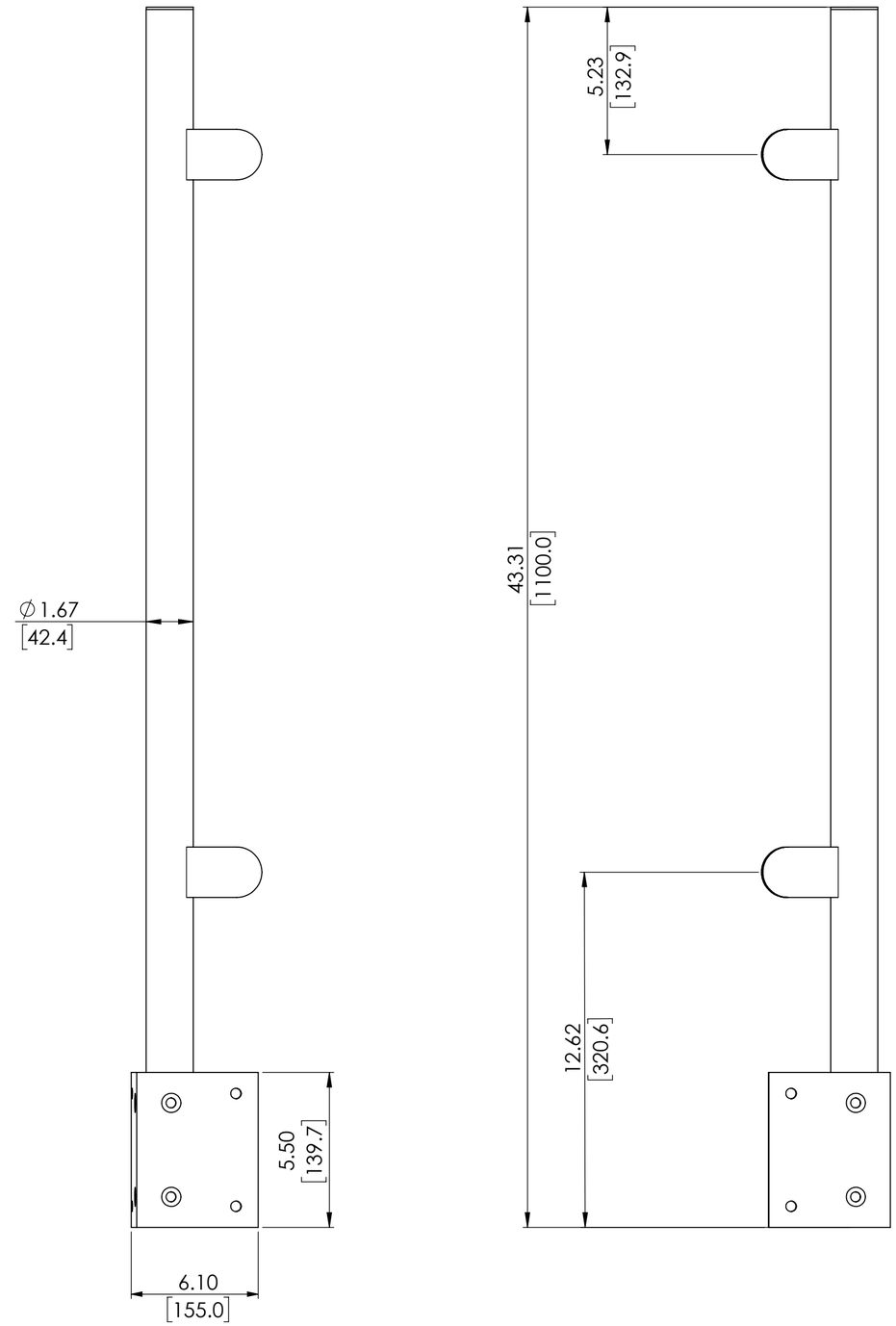

Inline Design

36" GLASS FASCIA MOUNT ROUND INSIDE CORNER POST

SKU: FRND.RGC.36.CRN.I

UNITS: INCHES/[MM]

PROPRIETARY AND COPYRIGHT

THE INFORMATION CONTAINED IN THIS DRAWING IS THE SOLE PROPERTY OF INLINE DESIGN. ANY REPRODUCTION IN PART OR AS A WHOLEWITHOUT THE WRITTEN PERMISSION OF INLINE DESIGN IS PROHIBITED

REVISION: 1.01

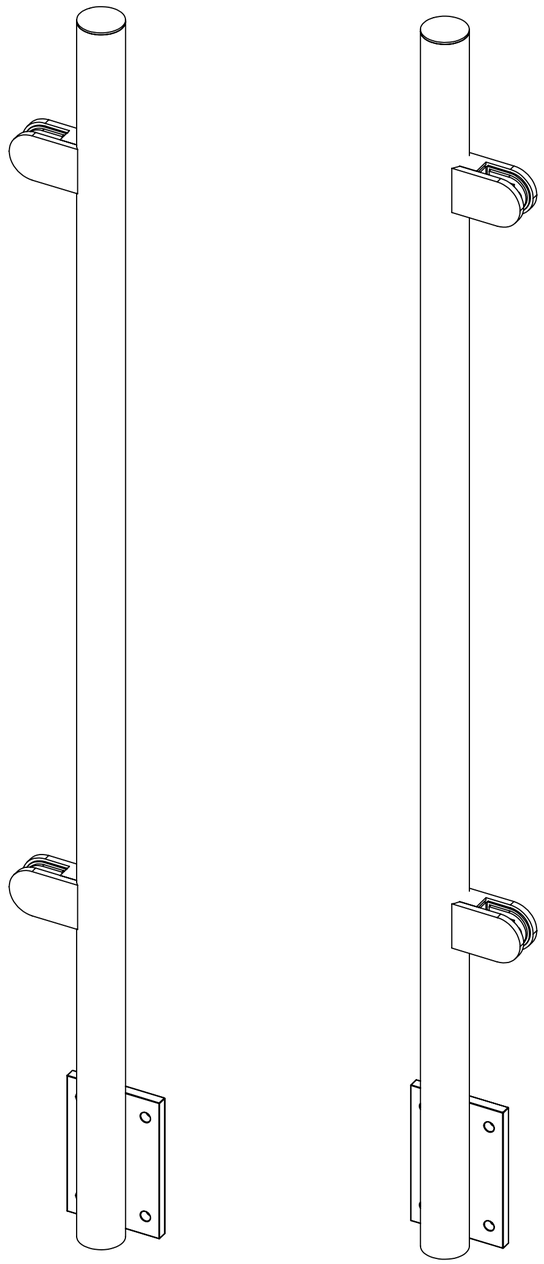

LEFT

RIGHT

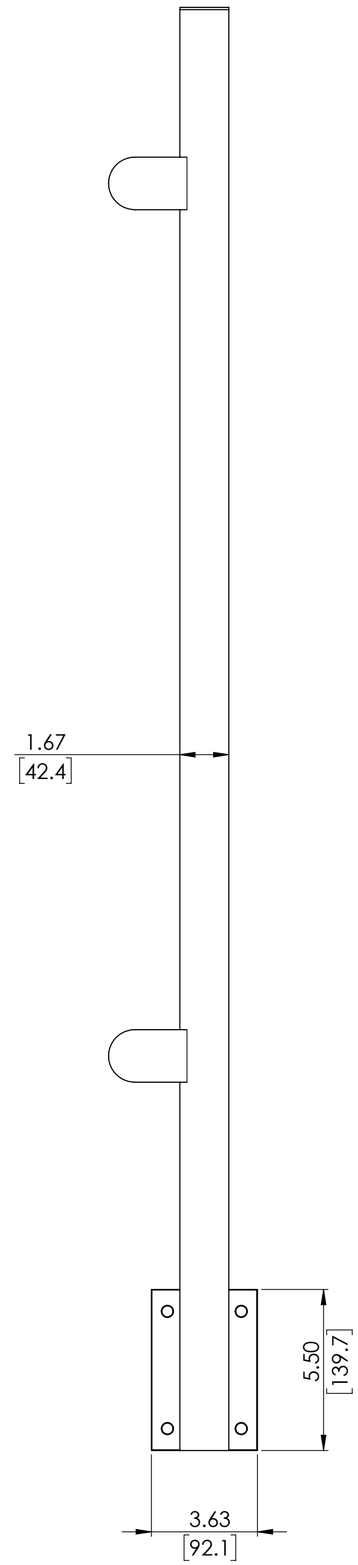

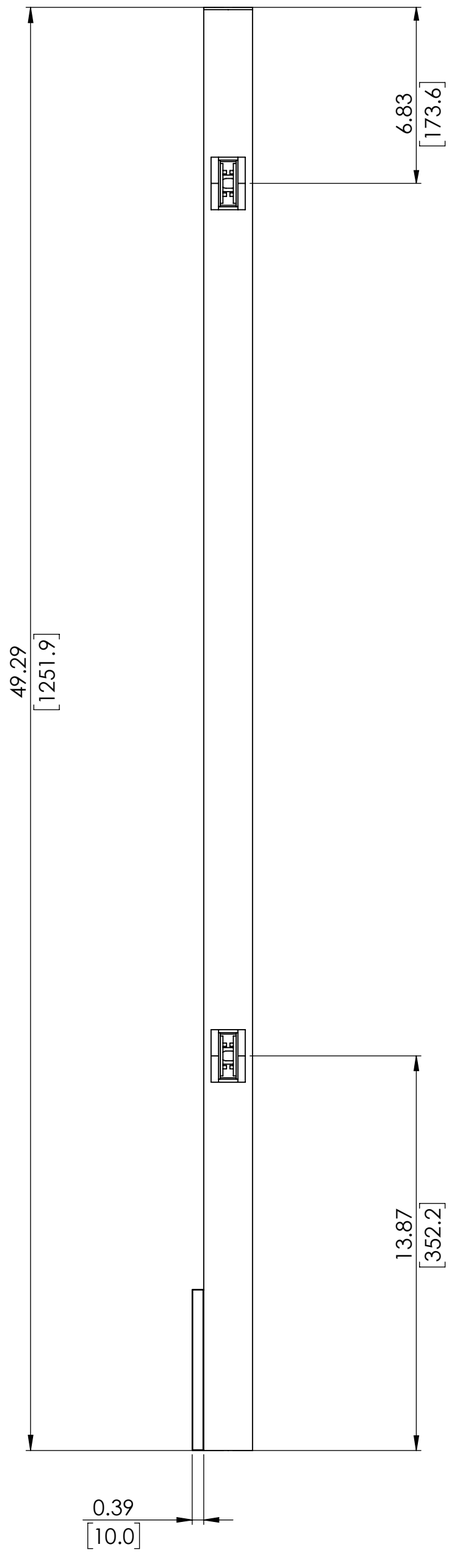

Inline Design

42" GLASS FASCIA MOUNT ROUND END POST

SKU: FRND.RGC.42.END

UNITS: INCHES/[MM]

PROPRIETARY AND COPYRIGHT

THE INFORMATION CONTAINED IN THIS DRAWING IS THE SOLE PROPERTY OF INLINE DESIGN. ANY REPRODUCTION IN PART OR AS A WHOLEWITHOUT THE WRITTEN PERMISSION OF INLINE DESIGN IS PROHIBITED

REVISION: 1.01

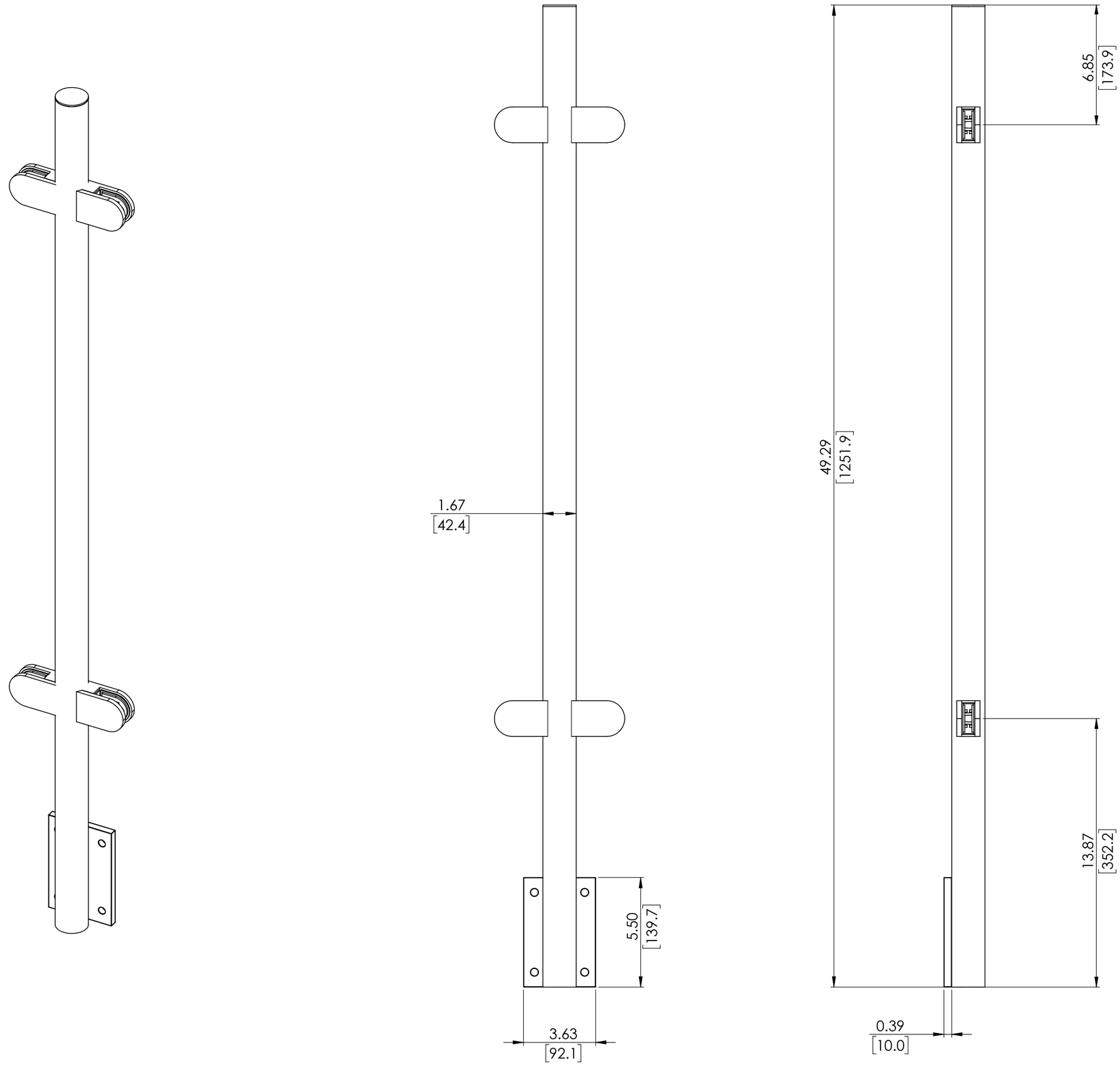

Inline Design

42" GLASS FASCIA MOUNT ROUND MIDDLE POST

SKU: FRND.RGC.42.MID

UNITS: INCHES/[MM]

PROPRIETARY AND COPYRIGHT

THE INFORMATION CONTAINED IN THIS DRAWING IS THE SOLE PROPERTY OF INLINE DESIGN. ANY REPRODUCTION IN PART OR AS A WHOLEWITHOUT THE WRITTEN PERMISSION OF INLINE DESIGN IS PROHIBITED

REVISION: 1.01

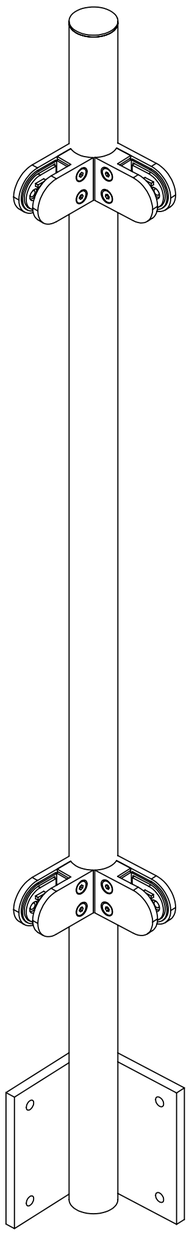

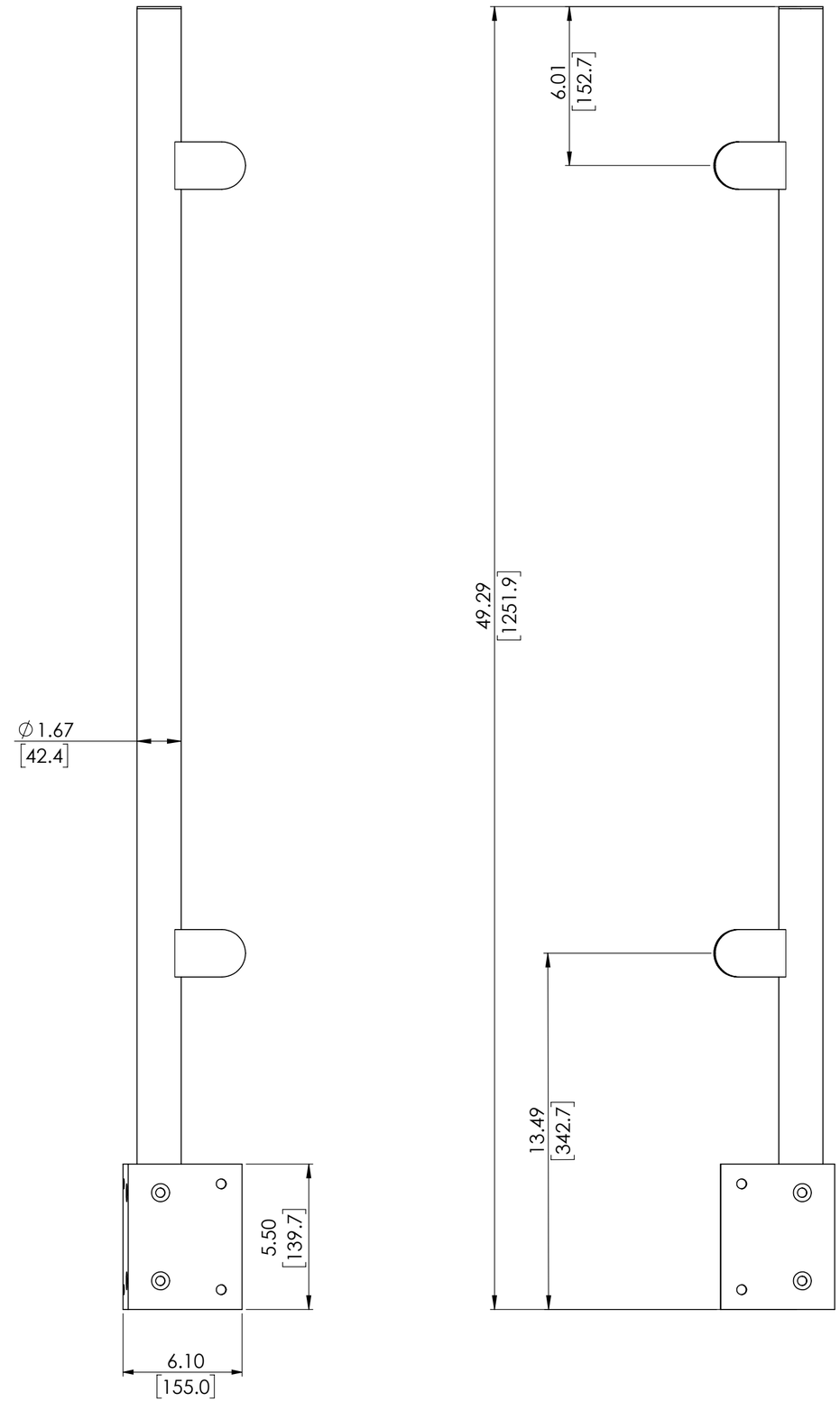

Inline Design

42" GLASS FASCIA MOUNT ROUND INSIDE CORNER POST

SKU: FRND.RGC.42.CRN.I

UNITS: INCHES/[MM]

PROPRIETARY AND COPYRIGHT

THE INFORMATION CONTAINED IN THIS DRAWING IS THE SOLE PROPERTY OF INLINE DESIGN. ANY REPRODUCTION IN PART OR AS A WHOLEWITHOUT THE WRITTEN PERMISSION OF INLINE DESIGN IS PROHIBITED

REVISION: 1.01

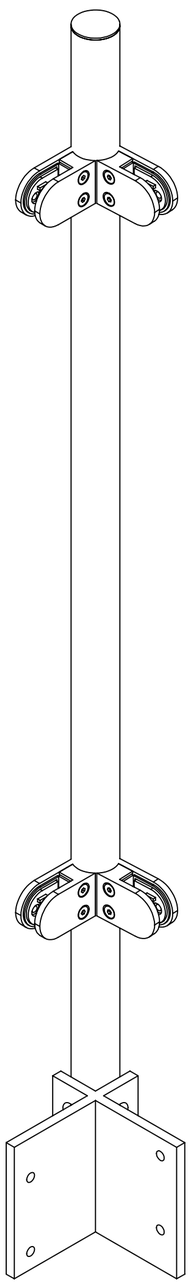

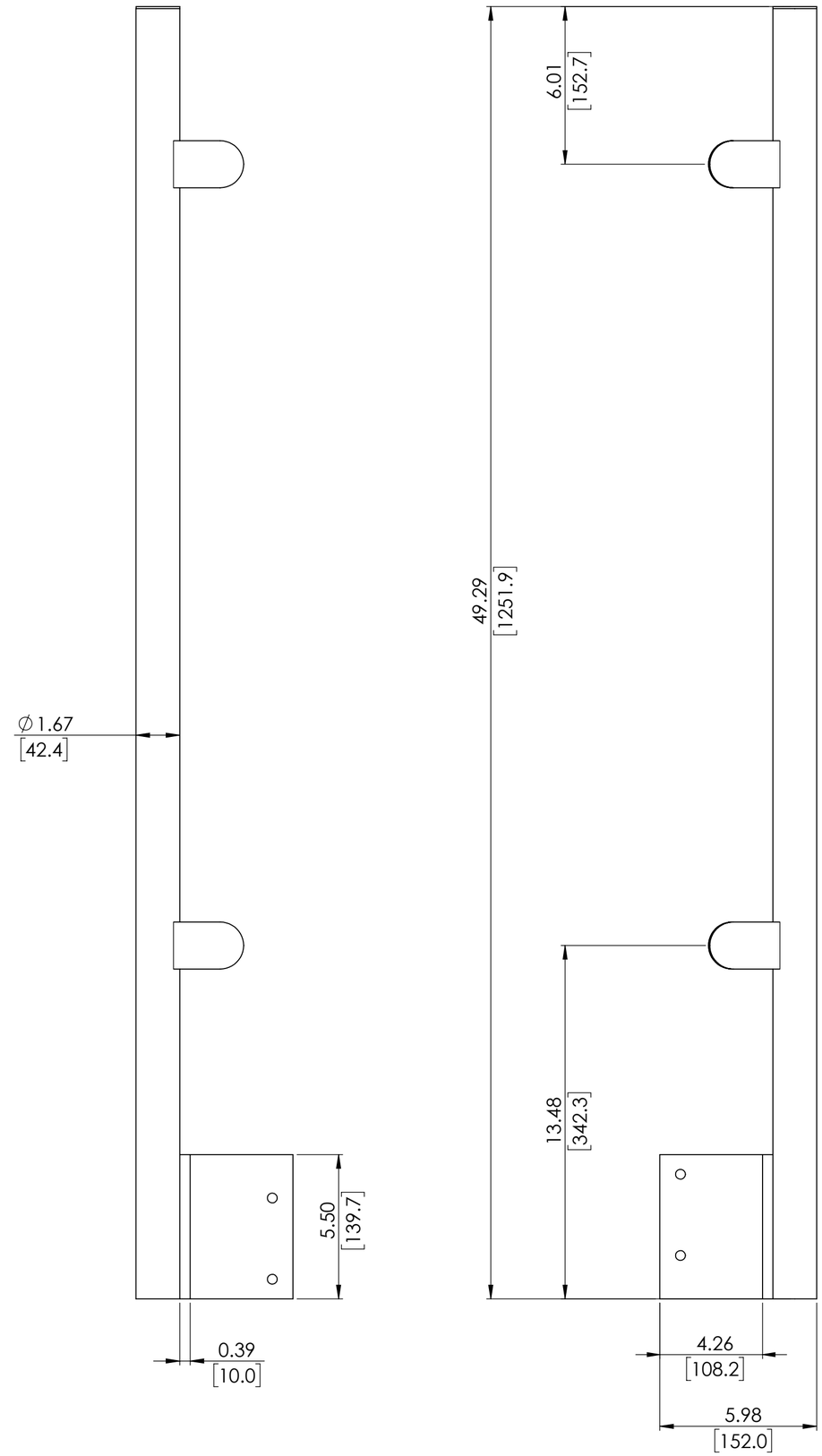

Inline Design

42" GLASS FASCIA MOUNT ROUND OUTSIDE CORNER POST

SKU: FRND.RGC.42.CRN.O

UNITS: INCHES/[MM]

PROPRIETARY AND COPYRIGHT

THE INFORMATION CONTAINED IN THIS DRAWING IS THE SOLE PROPERTY OF INLINE DESIGN. ANY REPRODUCTION IN PART OR AS A WHOLEWITHOUT THE WRITTEN PERMISSION OF INLINE DESIGN IS PROHIBITED

REVISION: 1.01