STUDIO BAGNO

# MILADY WALL FACED PAN

**STYLE**

WALL FACED PAN (RIMLESS)

**CODE**

MIL002

**COLOURS**

White + Premium Colours

**INCLUSIONS**

Connector, soft close seat and fixings included.
S-trap connector supplied as standard.

**NOTES**

Set out
S-Trap: 100mm
P-Trap: 185mm

WELS 4-STAR RATING

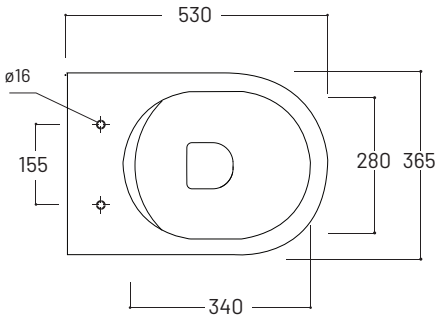


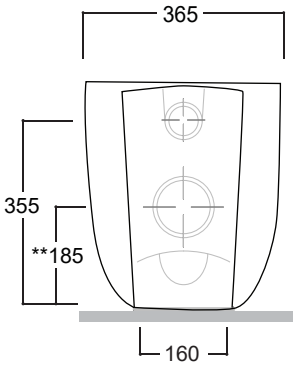


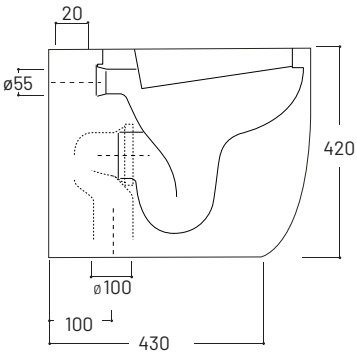


Note: All dimensions are in millimetres and are subject to normal manufacturing variances.
Studio Bagno Pty Ltd reserves the right to vary specifications at any time without notice. Date created: 22/01/2018