SERVICE MANUAL

CR-2040

FM/AM STEREO RECEIVER

■FRONT PANEL

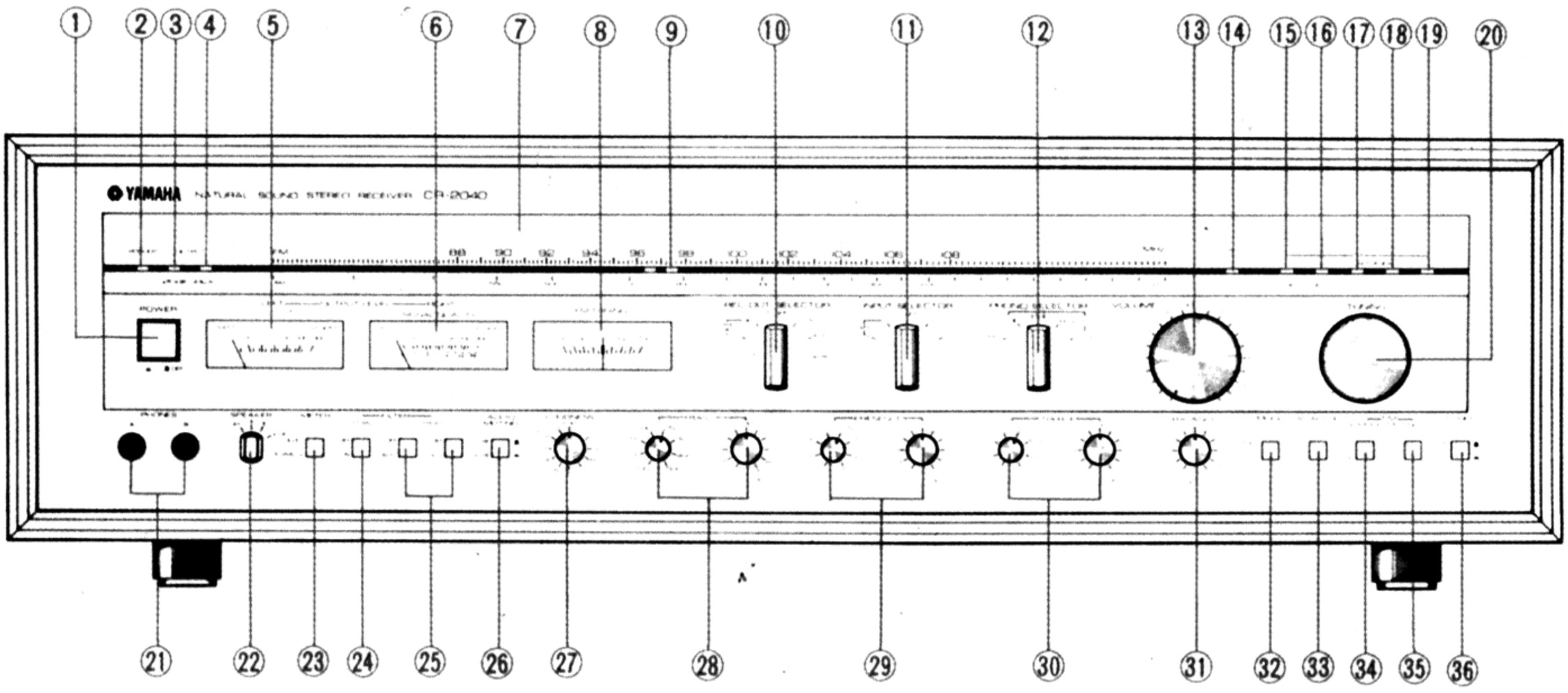

① POWER SWITCH
② POWER INDICATOR
③ OUTPUT (1/2 POWER) INDICATOR
④ OUTPUT (OVERLOAD) INDICATOR
⑤ OUTPUT LEVEL METER (LEFT)
⑥ OUTPUT LEVEL METER (RIGHT) /SIGNAL QUALITY METER
⑦ FM/AM DIAL SCALE
⑧ FM TUNING METER
⑨ DIAL POINTER
⑩ REC OUT SELECTOR
⑪ INPUT SELECTOR
⑫ PHONO SELECTOR
⑬ VOLUME CONTROL
⑭ AM INDICATOR
⑮ FM STEREO INDICATOR
⑯ FM BLEND INDICATOR
⑰ FM LOCAL INDICATOR
⑱ FM DX INDICATOR
⑲ FM OTS INDICATOR
⑳ TUNING KNOB
㉑ PHONES JACKS
㉒ SPEAKER SELECTOR
㉓ METER SWITCH
㉔ LOW FILTER
㉕ HIGH FILTER
㉖ AUDIO MUTING SWITCH
㉗ LOUDNESS CONTROL
㉘ BASS CONTROLS
㉙ PRESENCE CONTROLS
㉚ TREBLE CONTROLS
㉛ BALANCE CONTROL
㉜ MODE SWITCH
㉝ ADAPTOR SWITCH
㉞ FM IF MODE SWITCH
㉟ FM MUTING/OTS SWITCH
㊱ TUNER AM/FM SWITCH

004383

YAMAHA

Printed in Japan '79 FEB. 2.32K T.T

CONTENTS

PACKAGE INSTRUCTION 2
REAR PANEL 3
INTERNAL VIEW 4
DIAL MECHANISM 4
PARTIAL DISASSEMBLY 5
MEASUREMENT and ADJUSTMENT 6
SPECIFICATIONS 8
BLOCK DIAGRAM 9
INTEGRATED CIRCUITS 10
WIRING DIAGRAM 12
SCHEMATIC DIAGRAM 13

PACKAGE INSTRUCTION

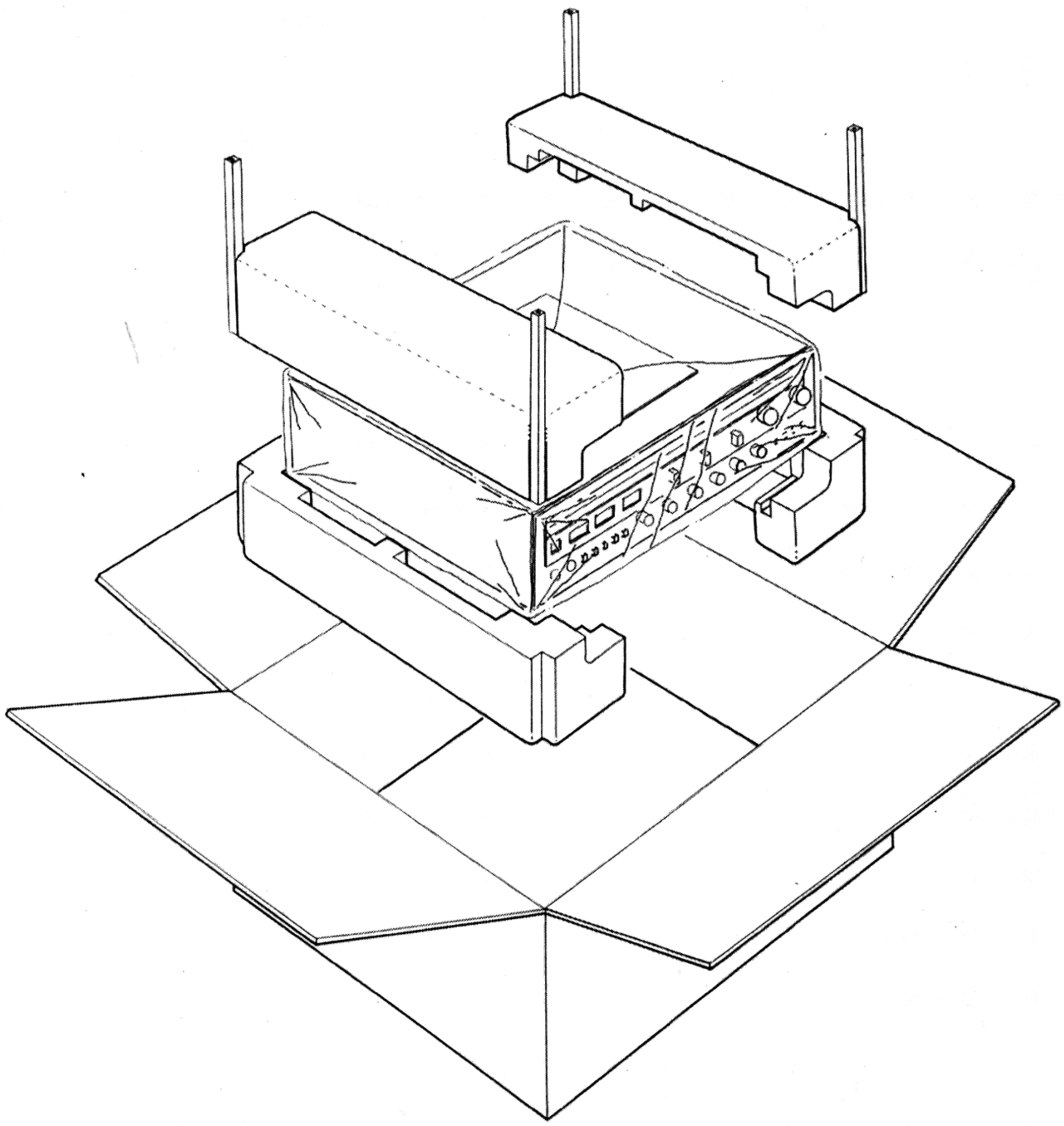

■REAR PANEL

- U.S. and CANADIAN MODELS

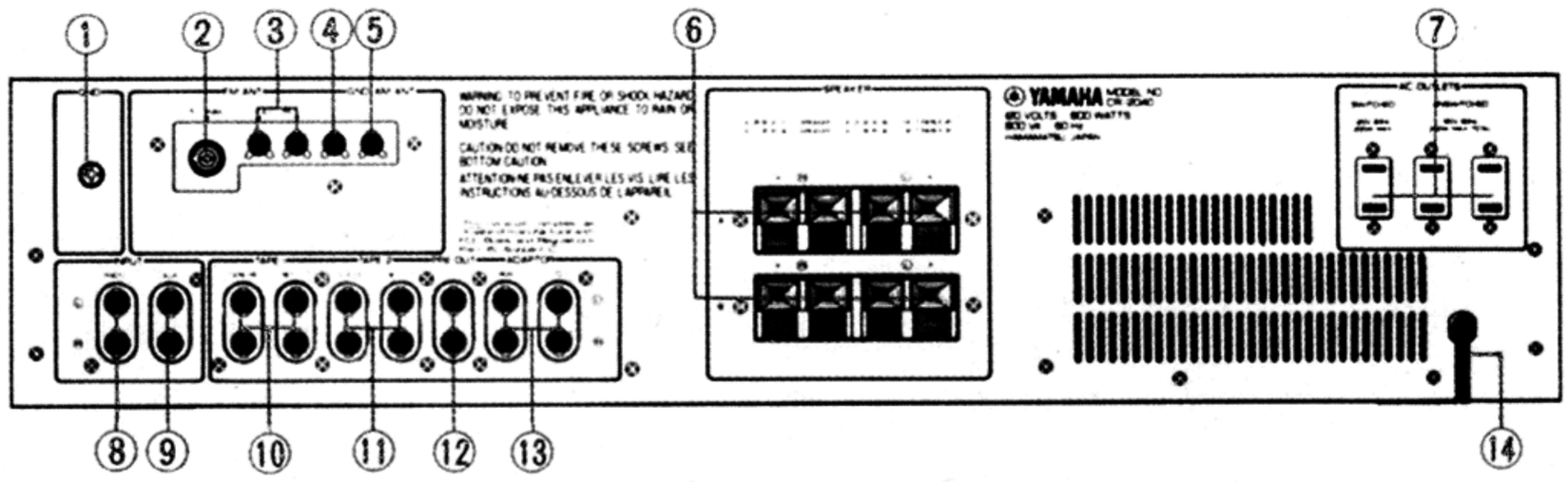

- GENERAL MODEL

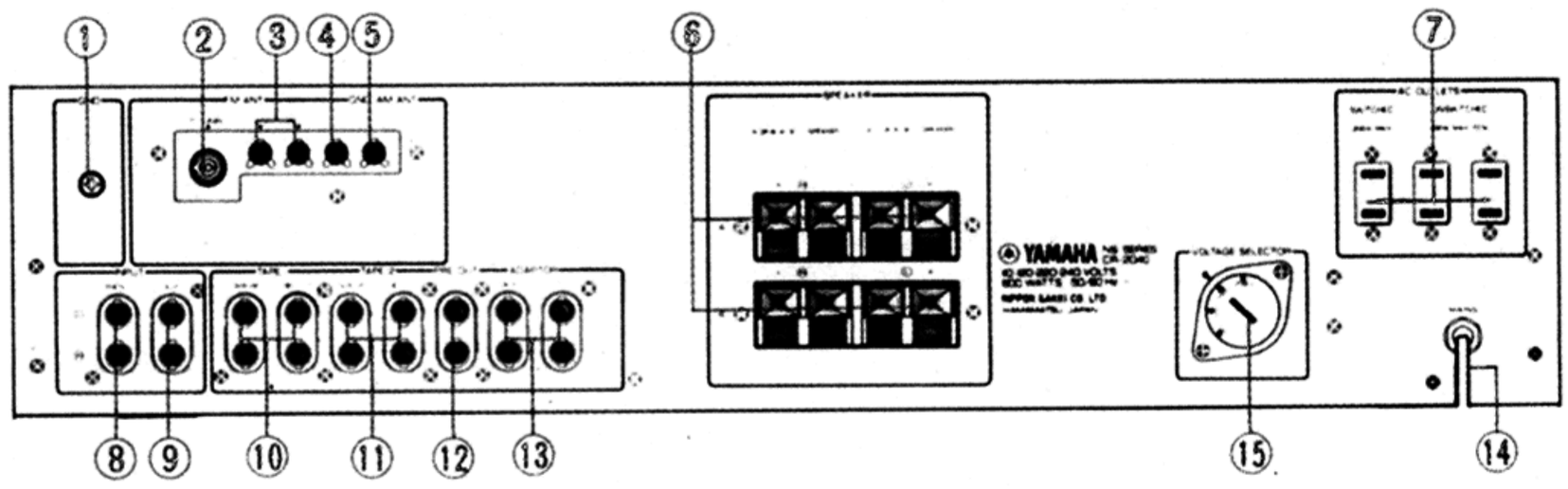

- BRITISH and AUSTRALIAN MODELS

(British Model)

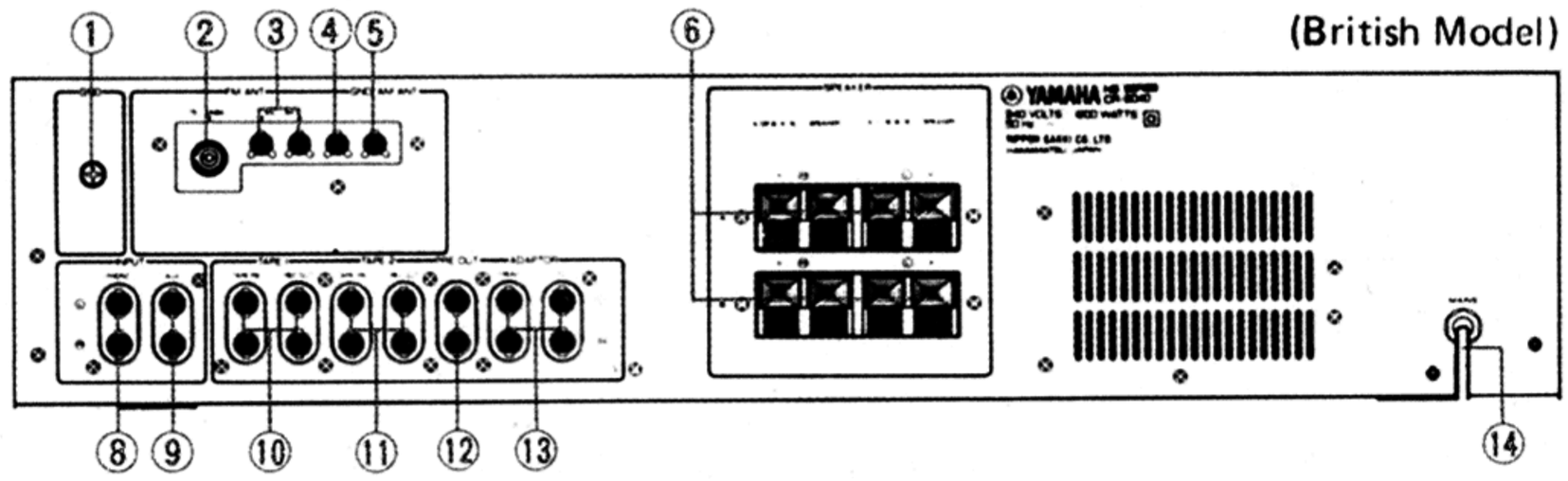

- NORTH EUROPEAN MODEL

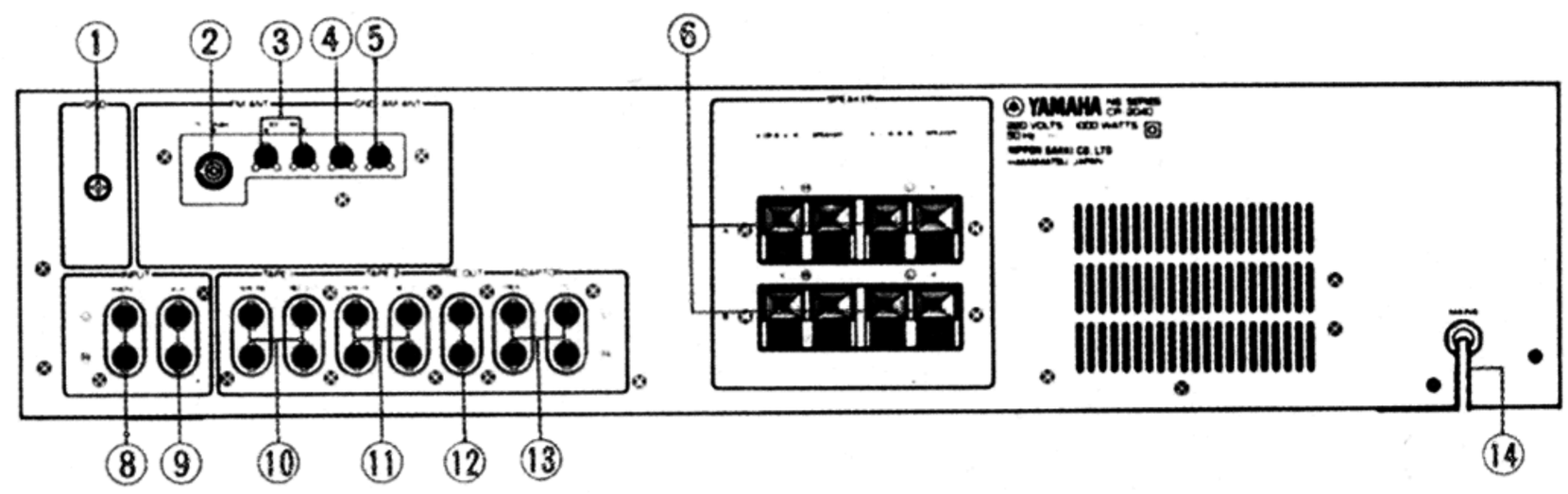

① GROUND TERMINAL
② FM ANTENNA TERMINAL (75Ω)
③ FM ANTENNA TERMINAL (300Ω)
④ AM GROUND TERMINAL
⑤ AM ANTENNA TERMINAL
⑥ SPEAKERS TERMINALS
⑦ AC OUTLETS
⑧ PHONO INPUT JACKS
⑨ AUX INPUT JACKS
⑩ TAPE 1 PB/REC JACKS
⑪ TAPE 2 PB/REC JACKS
⑫ PRE OUT JACKS
⑬ ADAPTOR JACKS
⑭ AC POWER CORD
⑮ VOLTAGE SELECTOR

■INTERNAL VIEW

TOP VIEW

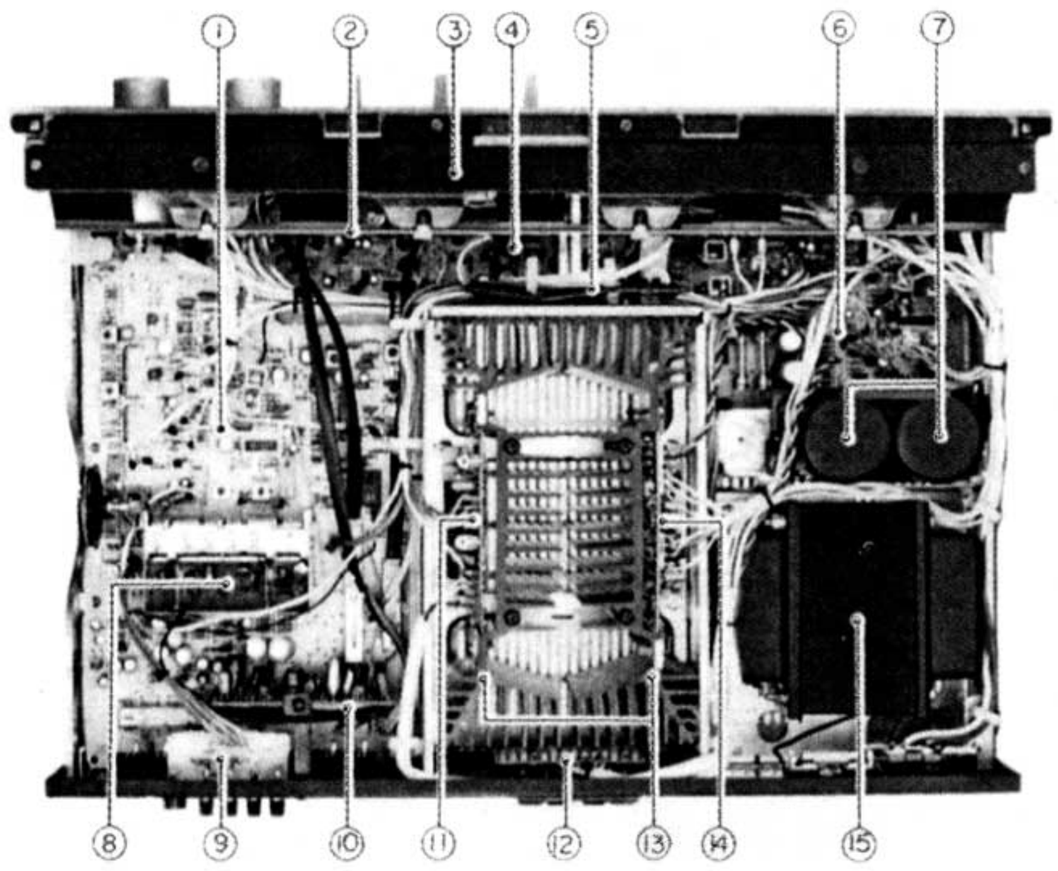

① TUNER CIRCUIT BOARD (1)
② LAMP CIRCUIT BOARD
③ LENS HOLDER (DIAL LAMP)
④ POWER CIRCUIT BOARD (2): TONE CONTROL
⑤ LEAD PIPE (DIAL POINTER LAMP)
⑥ POWER CIRCUIT BOARD (1)
⑦ C905, C906
⑧ FRONT END PACK
⑨ TUNER CIRCUIT BOARD (2): ANT.
⑩ POWER CIRCUIT BOARD (3): EQ
⑪ MAIN CIRCUIT BOARD (RIGHT)
⑫ POWER CIRCUIT BOARD (4): SPEAKERS
⑬ HEAT SINK
⑭ MAIN CIRCUIT BOARD (LEFT)
⑮ POWER TRANSFORMER

■DIAL MECHANISHM

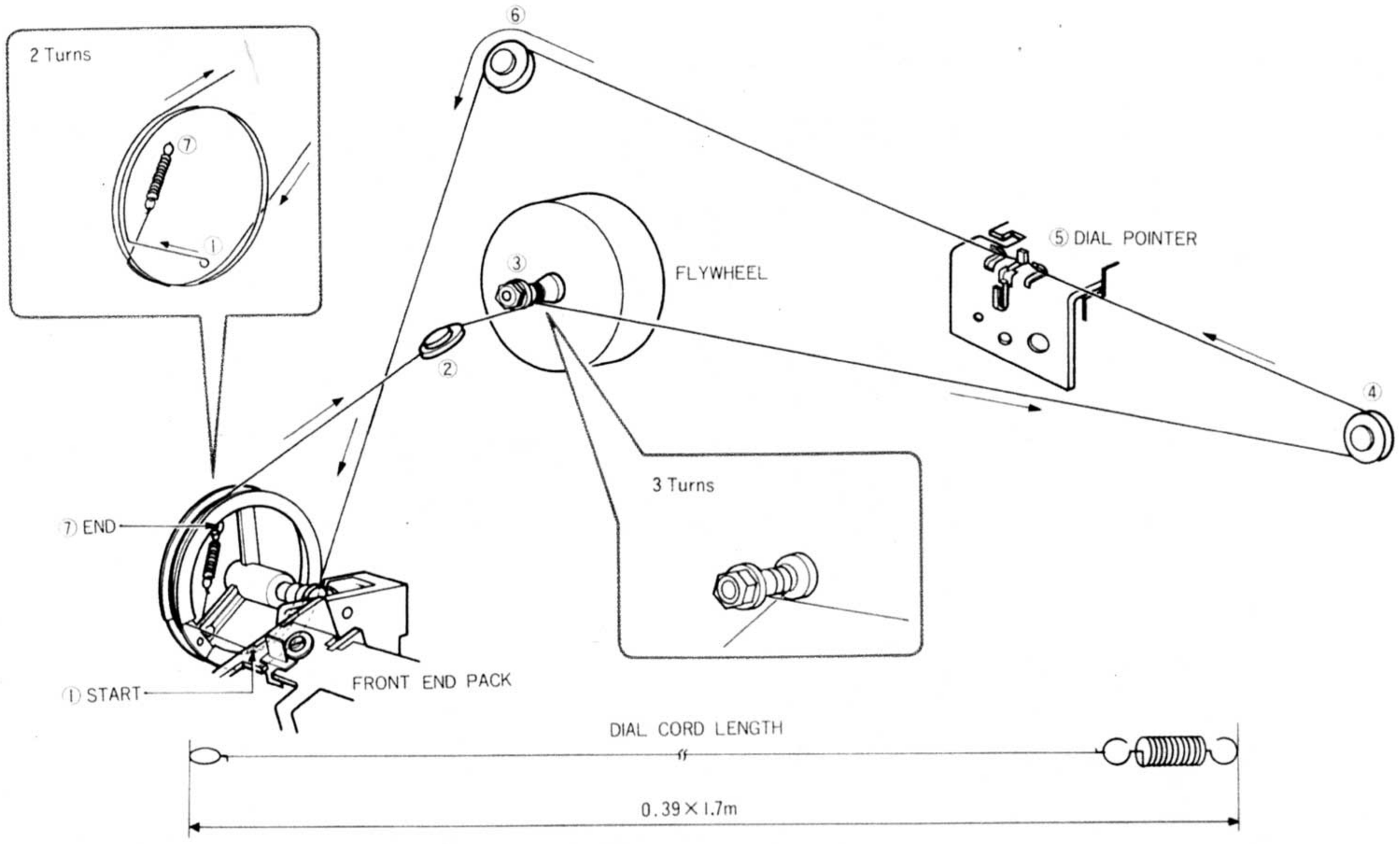

■PARTIAL DISASSEMBLY

TOP COVER REMOVAL

Remove the 4 screws.

Photo 1

BOTTOM COVER REMOVAL

Remove the screws ① to ⑭.

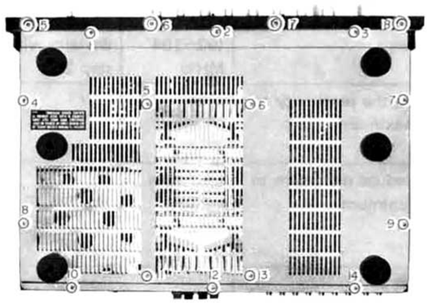

Photo 3

LENS HOLDER and LAMP C.BOARD REMOVAL

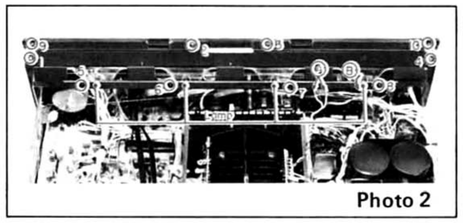

Photo 2

1. Detach the lead wires which are attached to the terminal Ⓐ in photo 2.
2. Remove the screws ① to ④ in photo 2 and then remove the lens holder with the lamp circuit board.
3. Remove the plastic rivets ⑤ to ⑧ in photo 2 and then the lamp circuit board is detached from the lens holder.
4. When exchanging the lamp, use a ⊖ driver, rotating counterclockwise (B).

FRONT PANEL REMOVAL

1. Pull out the VOLUME, BALANCE, TREBLE, PRESENCE, BASS and LOUDNESS knobs.
2. Use a hexagonal wrench to loosen the set screws of the PHONO, INPUT, REC OUT and SPEAKER knobs, and pull out the knobs.
3. Use a hexagonal wrench (over 60mm length) to loosen the set screws in photo 4, and pull out the TUNING knob. When there is not the hexagonal wrench, pull out the dial scale from the front panel and remove the back panel (remove the screws ① and ② in photo 6) and then loosen the set screws.
4. Remove the screws ⑮ to ⑱ in photo 3.
5. Remove the screws ① to ③ in photo 5.
6. Remove the screws ⑨ and ⑩ in photo 2.
7. Disconnect the lead wires of the LEVEL-L, LEVEL-R/SIGNAL Q and TUNING meter.
8. Pull out the front panel toward you.

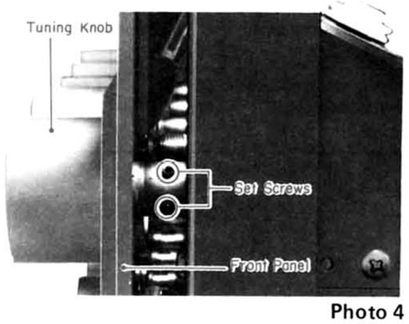

Photo 4

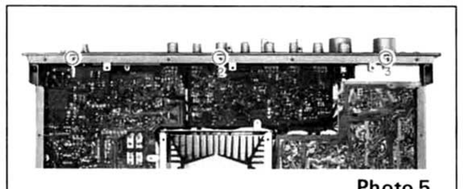

Photo 5

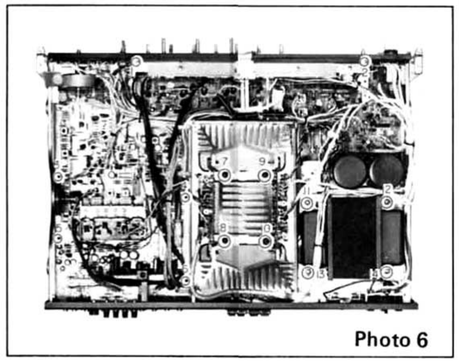

Photo 6

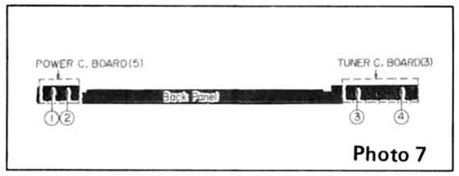

Photo 7

BACK PANEL REMOVAL

Remove the screws ① and ② in photo 6.

TUNER C.BOARD-3, POWER C.BOARD-5 (LED) REMOVAL

Remove the plastic rivets ① to ④ in photo 7.

POWER SWITCH REMOVAL

Remove the screws ① and ② in photo 8.

POWER C.BOARD-6 (VOLUME) REMOVAL

Remove the nuts Ⓐ and Ⓑ in photo 8.

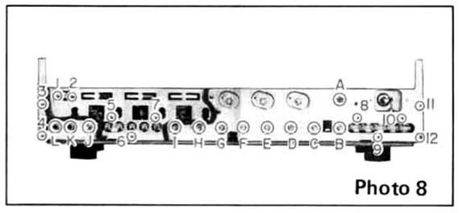

Photo 8

SUB CHASSIS REMOVAL

1. Remove the pilot lamps from the sub chassis.
2. Disconnect the wires of REC OUT, INPUT and PHONO selector switches.
3. Remove the screws ① to ⑫ in photo 8.
4. Remove the nuts Ⓐ to Ⓛ in photo 8.

POWER TRANSFORMER REMOVAL

Remove the screws ⑪ to ⑭ in photo 6.

TUNER C.BOARD-2 (ANTENNA) REMOVAL

Remove the screws ① to ③ in photo 9.

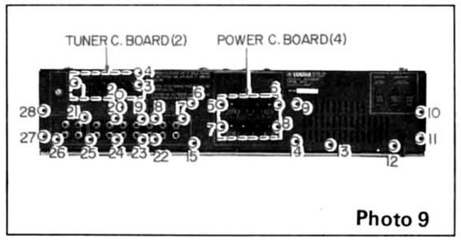

Photo 9

REAR PANEL REMOVAL

Remove the screws ① to ㉘ in photo 9.

TUNER C.BOARD-1 REMOVAL

1. Disconnect the wires of REC OUT, INPUT and PHONO selector switches.
2. Remove the screws ③ to ⑥ in photo 6.
3. Remove the screws ⑧ to ⑩ in photo 8.

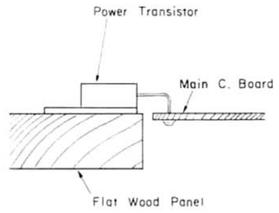

*** Care to exercise when replacing Power Transistor Be sure to keep the board and the radiator panel in parallel when making replacement of Power Transistor. Apply a flat batten as shown in the figure for convenience when installing Power Transistor.**

POWER C.BOARD-1 REMOVAL

Remove the screws ① to ④ in photo 11.

POWER C.BOARD-2 REMOVAL

Remove the screw ⑤ in photo 11.

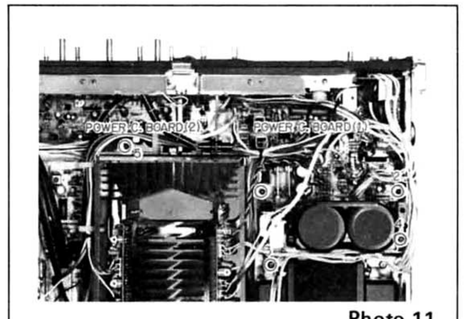

Photo 11

MAIN C.BOARD REMOVAL

1. Remove the screws ⑦ to ⑩ in photo 6 and the main circuit board is removed with the heat sink.
2. Remove the 11 screws in photo 10 and main circuit board is detached from the heat sink.

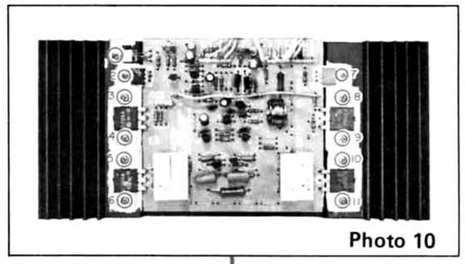

Photo 10

POWER C.BOARD-4 (SPEAKER) REMOVAL

Remove the screws ⑤ to ⑧ in photo 9.

*** Care to exercise when drawing Main Circuit Board out Remove a wire bundle, connected to the board, from the cable clip and draw the board out. Do not fail to place an insulator beneath the main circuit board before making adjustment or repair.**

■MEASUREMENT and ADJUSTMENT

1. FM tuner overall adjustment

1. Set the switches to the following positions.
   TUNER . . . . . FM
   IF MODE . . . . . LOCAL
   FM MUTING/OTS . . . . . OFF
2. When adjusting the steps except step 11, use a 19kHz low pass filter.
3. Adjustment is to be carried out only after 5 minutes.
4. Abbreviation of instruments

FM SG	:	FM signal generator
OSC	:	Oscilloscope
D.M	:	Digital multimeter
DIST.M	:	Distortion meter
F.C	:	Frequency counter

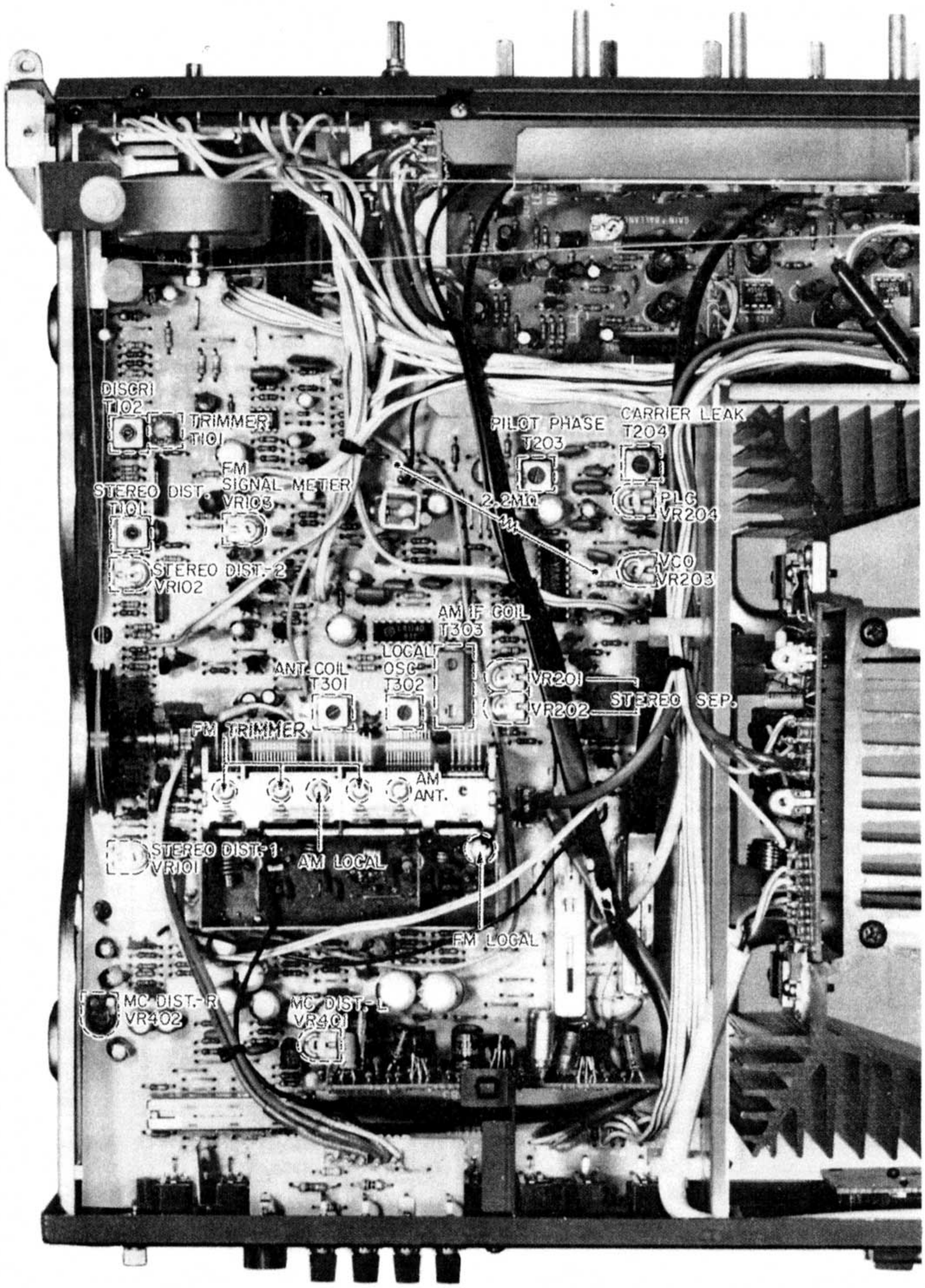

Step	Adjustment items	Terminals to be connected	Instrument required	Adjustment location	Adjustment method	Rating or standard	Remarks
1	Discriminator balance			T-102 discriminator coil	Move core until tuning meter pointer deflects to 0 with noise at detuned point near 98MHz.	Check that meter pointer mechanically points to 0 when power switch is set OFF.	
2	Pointer alignment			Tuning knob pointer	Rotate the tuning knob and align pointer with the starting point of the dial scale.	Less than ±1mm	
3	Tracking adjustment I	FM antenna terminal REC OUT terminal	FM SG 98MHz 100% MONO 1kHz 60dBμ OSC D.M. DIST.M	Tuning knob Local oscillator trimmer	Rotate tuning knob and align pointer with 98MHz on dial scale. Rotate trimmer and set to center of tuning meter.		
4	Tracking adjustment II	—do.—	—do.—	Local oscillator trimmer	Adjust deviation all over the frequency range.	Less than ±2mm (92~104 MHz)	Adjust only when pointer deviates with step 2.
5	FRONT END sensitivity adjustment	—do.—	—do.— weak input level	FM tuning trimmer	Set the sensitivity to maximum.		
6	Monaural distortion adjustment	—do.—	—do.— 98MHz 100% Mono 1kHz 60dBμ	TC-101 trimmer	Reduce distortion to minimum.	Less than —63dB (—66dB)	
7	VCO adjustment	—do.—	nonmodulation F.C —do.—	VCO VR	Set to 19kHz.	19kHz ±20Hz (5Hz)	Connect 2.2MΩ between +13V and 14 pin of IC201.
8	Pilot phase adjustment	—do.—	—do.— stereo (L-R) 1kHz 100%	T203 (GE6057)	Set the output to maximum.		
9	Stereo distortion adjustment	—do.—	—do.— stereo L 1kHz 100%	DIST.1 VR DIST.2 VR T101 (GE10026)	Reduce distortion to minimum.	Less than —61dB (—66dB)	
10	Stereo separation adjustment	—do.—	—do.— stereo L, R 1kHz 100%	SEP. VR	Set the separation to maximum.	More than 50dB (55dB)	
11	Carrier leakage adjustment	—do.—	—do.— stereo pilot 9%	PLC VR T204 (GE6057)	Observe waveforms on OSC and adjust so that level is reduced to minimum.	Less than —70dB (—75dB)	
12	Signal meter full scale adjustment	—do.—	—do.— nonmodulation 80dBμ	FM VR	Adjust so that pointer is within rated range.	70~80 (75)	Less than 5 at detuned point

2. AM tuner adjustment

1. Set the switch to the following position.
   TUNER . . . . . AM
2. Proceed with the AM section adjustments after having finished the FM section adjustment.
3. The quasi-antenna circuit for AM section adjustment.

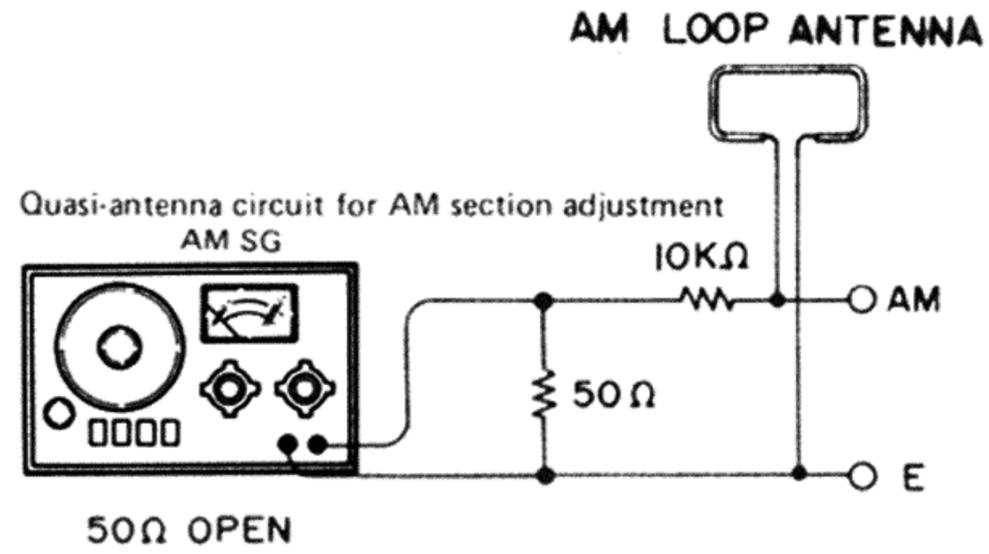

Fig. 1

Output level shows the 50Ω load terminal.
The loop antenna is not to be close to the metal parts.

Step	Adjustment item	Terminals to be connected	Instrument required	Adjustment location	Adjustment method	Rating or standard
1	Local oscillator coil adjustment	Output L or R	AM signal generator 600kHz, 60dBμ	Tuning knob T302 (GE 6013)	Align pointer with 600kHz using tuning knob, rotate coil core and adjust for a maximum signal quality meter deflection.	
2	Low-frequency range sensitivity adjustment	Same as step 1	Same as step 1	T301 (GE 10023)	Adjust for a maximum signal meter pointer deflection at same tuning point as under step 1.	
3	Local oscillator trimmer adjustment	Same as step 1	AM signal generator 1400kHz, 60dBμ	Tuning knob front end local oscillator trimmer	Align pointer with 1400kHz using tuning knob, rotate trimmer and set for a maximum signal meter pointer deflection.	
4	High-frequency range sensitivity adjustment	Same as step 1	Same as step 3	Front end AM ANT trimmer	Adjust for a maximum signal quality meter pointer deflection at step 3 tuning point.	
5	Sensitivity difference adjustment	Same as step 1	AM signal generator 600kHz, 1400kHz 60dBμ	Repeat steps 1 to 4		Scale deviation: less than ±1.5mm for 600kHz, 1400kHz
6	Medium frequency range check	Same as step 1	AM signal generator 1000kHz, 60dBμ	Tuning knob	Set for maximum signal quality meter pointer deflection.	Scale deviation: less than ±2mm

3. Audio section adjustment

Before measurement

1. After the power switch is pushed ON, wait 1 minute before measuring, to be sure of the most stable operation.
2. Connect dummy load resistor (8Ω) to the speaker terminals.

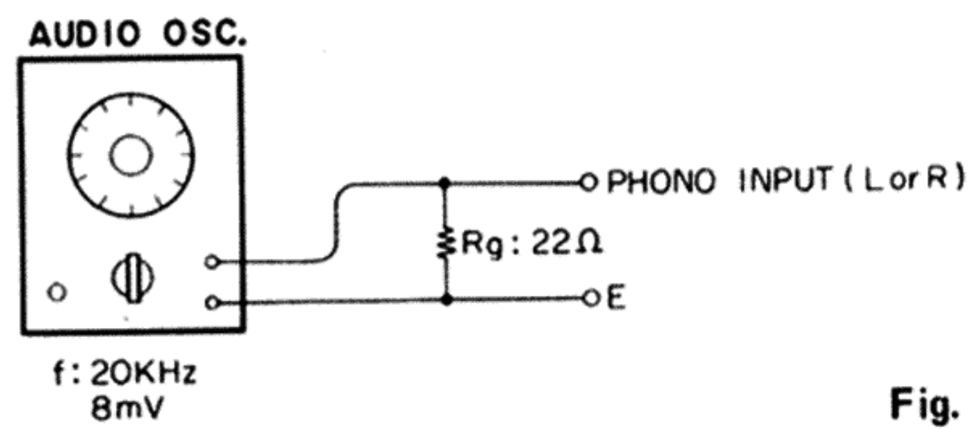

Fig. 2

- **Main amplifier section adjustment (Main C.Board)**

Step	Adjustment item	Adjustment	Instruments	Terminals test points	Remarks or standard
1	Center DC offset voltage	VR701 (L) VR702 (R)	D.M	LO, E (L) RO, E (R)	0 ±10mV
2	Idling current adjustment	VR703 (L) VR704 (R)	D.M	~~E TP (L, R)~~ TP-RO, LO (L, R)	−10 ±2mV

- **Power section adjustment (Power C.Board-1)**

Step	Adjustment item	Adjustment	Instruments	Terminals test points	Remarks or standard
1	Power source voltage adjustment	VR901	D.M	E-+60	60 ±2V
2	Meter full scale adjustment	VR902 (L) VR903 (R)	OSC		At 8Ω load, low output power, the pointer of level meter points to 10W.

- **MC head amplifier section adjustment (Tuner C. Board-1)**
  1. Set the switches to the following positions.
     PHONO . . . . . MC AMP
     INPUT . . . . . PHONO
     REC OUT . . . . . PHONO
  2. Connect the audio frequency oscillator to the PHONO terminals as shown in Fig. 2.
  3. Connect the distortion meter to REC OUT terminals and adjust VR401 (L) and VR402 (R) so that distortion is reduced to minimum.

- **Gain balance adjustment (Power C.Board-2)**
  1. Apply 1kHz sine wave (100mV) to the AUX terminals (L and R).
  2. Adjust VR607 so that the difference between L channel output level and R channel one is within 0.2dB at speaker terminal.

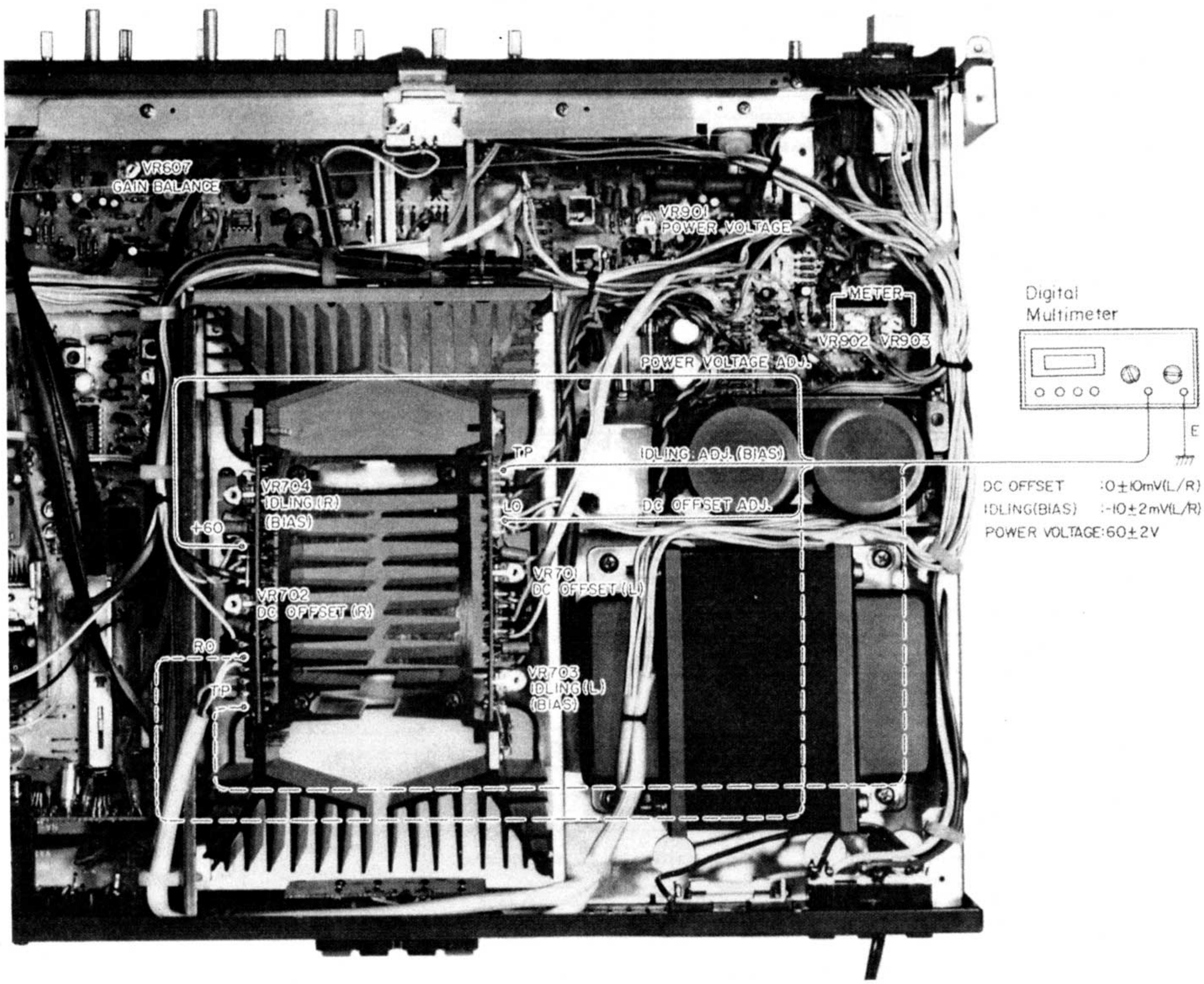

SPECIFICATIONS

AUDIO SECTION	
Minimum RMS Output per Channel	
120 Watts (8 ohms) from 20 to 20,000Hz at no more than 0.002% Total Harmonic Distortion.	
140 Watts (4 ohms) from 20 to 20,000Hz at no more than 0.002% Total Harmonic Distortion.	
Continuous RMS Power	140 Watts (8 ohms) (140 Watts DIN)
(both channels driven, 1kHz)	160 Watts (4 ohms) (180 Watts DIN)
Input Sensitivity/Impedance	
Phono (MM)	2.5 mV/33, 47, 68, 100 kΩ
Phono (MC)	100 μV/50 Ω
Aux, Tape 1, 2	120 mV/40 kΩ
Maximum Input Levels	
Phono (MM)	270 mV (at 1 kHz)
Phono (MC)	11 mV (at 1 kHz)
Output Level/Impedance	
Rec Out terminals	120 mV/220 Ω
Frequency Response	
Phono (MM, MC) RIAA deviation	±0.2 dB
Aux, Tape 1, 2	20 Hz to 20 kHz ±0.2 dB
	5 Hz to 100 kHz +0.2dB, −2 dB
Tone Control Characteristics	
Bass turnover frequencies	100 ~ 500 Hz (continuous)
Bass boost/cut	±10 dB
Treble turnover frequencies	2 ~ 10 kHz (continuous)
Treble boost/cut	±10 dB
Presence center frequencies	1 ~ 5 kHz (center)
Presence boost/cut	±6 dB
Filters and Loudness Control Characteristics	
Low	25 Hz (12 dB/octave)
High 1, 2	6, 10 kHz (6 dB/octave)
Loudness control	Level-related equalization
Signal-to-Noise Ratio (IHF-A Network)	
Phono (MM)	95 dB (for 10 mV, shorted)
Phono (MC)	86 dB (for 500 μV)
Aux, Tape	100 dB (shorted)
Residual noise (at Vol Min)	0.22 mV
Distortion 20 Hz to 20 kHz	
Phono (MM) to Rec Out	0.01% 3V output
Phono (MC) to Rec Out	0.05% 3V output
Aux, Tape to Sp Out (8 Ω)	0.01% 60 W/8 Ω
Intermodulation Distortion Ratio 20 Hz to 20 kHz (70 Hz : 7 kHz = 4 : 1)	
Sp Out	0.02% 120 W/8 Ω
	0.01% 60 W/8 Ω
Noise-Distortion Clearance Range (NDCR) for 0.1% into 8 Ω at 1 kHz	
Phono	MC 100 mW to 120W
	MM 20 mW to 120W
Power Bandwidth (IHF)	10 Hz to 50 kHz (8 Ω, 0.05%)
Damping Factor (at 1 kHz)	40 into 8 Ω, 1 kHz
Meter Range	0.01 W to 300 W
FM SECTION	
Tuning range	87.6 to 108 MHz
Usable Sensitivity (IHF Mono 98 MHz)	
300Ω	1.6 μV/9.3 dBf (30% Dev.)
75Ω	0.8 μV/9.3 dBf
50 dB Quieting Sensitivity	
Mono	3.2 μV/15.3 dBf
Stereo	35 μV/36.1 dBf
Auto	25 μV/33.2 dBf
Signal-to-Noise Ratio	
Mono (65 dBf)	90 dB
Stereo (75 dBf)	84 dB
Image Response Ratio (98 MHz)	80 dB
IF Response Ratio (98 MHz)	100 dB
Spurious Response Ratio (98 MHz)	100 dB
AM Suppression Ratio (IHF)	60 dB
Capture Ratio	1.5 dB
Alternate Channel Selectivity DX	82 dB
Local	48 dB

downloaded from www.hifiengine.com

Distortion (at 65 dBf)		
Mono	100 Hz	0.07%
	1 kHz	0.07%
	6 kHz	0.1%
Stereo	100 Hz	0.09%
	1 kHz	0.09%
	6 kHz	0.15%
Intermodulation Distortion (IHF)		
Mono		0.05%
Stereo		0.07%
Stereo Separation		
50 Hz		50 dB
1 kHz		50 dB
10 kHz		45 dB
Blend		10 dB
Subcarrier Product Ratio		70 dB
Frequency Response		
50 Hz to 10 kHz		±0.4 dB
30 Hz to 15 kHz		+0.4 dB, −1.0 dB
Muting Threshold (±22.5 kHz dev.)		5 μV (19.2 dBf)
AM SECTION		
Tuning Range		525 to 1,605 kHz
Sensitivity (IHF)		15 μV/m
Selectivity (1,000 kHz)		30 dB
Signal-to-Noise Ratio		50 dB (at 80 dB/m)
Image Response Ratio (1,000 kHz)		40 dB
IF Response Ratio (1,000 kHz)		35 dB
Spurious Response Ratio (1,000 kHz)		60 dB
Distortion (at 65 dBf)		0.4% (at 80 dB/m, 120 dB/m)
Tuner Section Output Level/Impedance		
FM (100% mod. at Rec Out)		450 mV/3.9 kΩ
AM (30% mod. at Rec Out)		150 mV/3.9 kΩ
GENERAL		
Semiconductors		102 Transistors, 14 ICs, 4 FETs, 31 Diodes, 9 Zener Diodes, 9 LEDs
Power Supplies		U.S. and Canadian Models 120V, 60Hz
		General Model 110/120/220/240V, 50/60Hz
		Australian and British Models 240V, 50Hz
		N. European Model 220V, 50Hz
Power Consumption		U.S.A. Model 600W
		Canadian Model 800VA
		General Model 600W
		Australian and N. European Models 1000W
		British Model 1200W
AC Outlets		U.S., Canadian and General Models
		Switched: 200W max.
		Unswitched: 200W max. Total.
Dimensions (W x H x D)		U.S. and Canadian Models
		580 x 167 x 407 mm (23" x 6-5/8" x 16-1/8")
		General, N. European, British and Australian Models
		560 x 151 x 407 mm (22" x 6" x 16-1/8")
Weight		U.S. and Canadian Models
		20.4kg (45 lbs)
		General, N. European, British and Australian Models
		18.9kg (41 lb 10 oz)

Specifications subject to change without notice.

■BLOCK DIAGAM

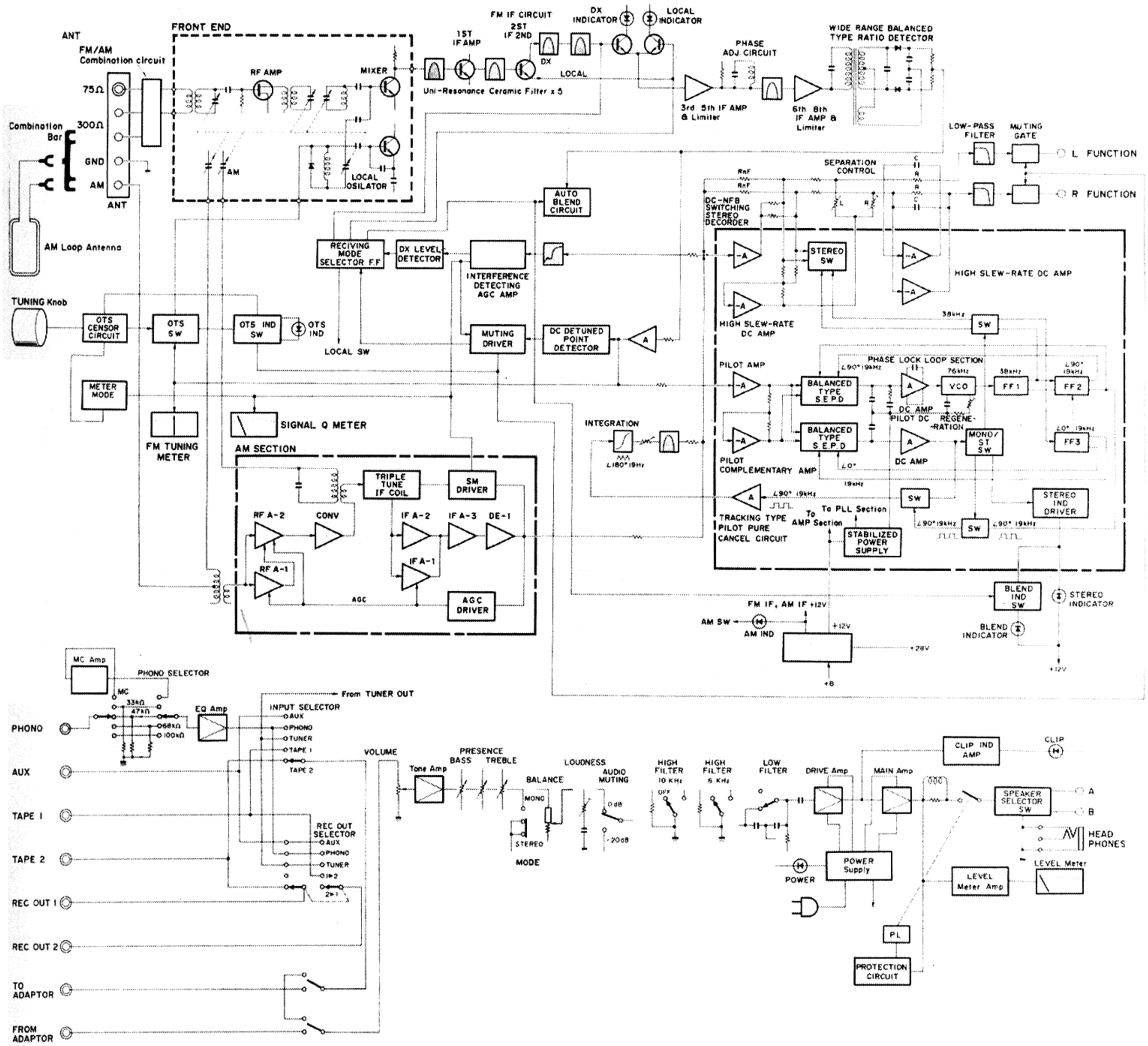

INTEGRATED CIRCUITS

IC101, IC102: μPC577H

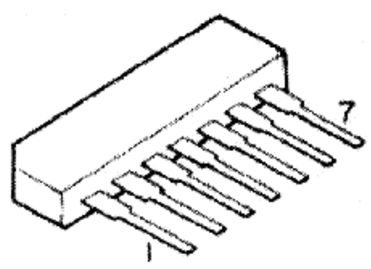

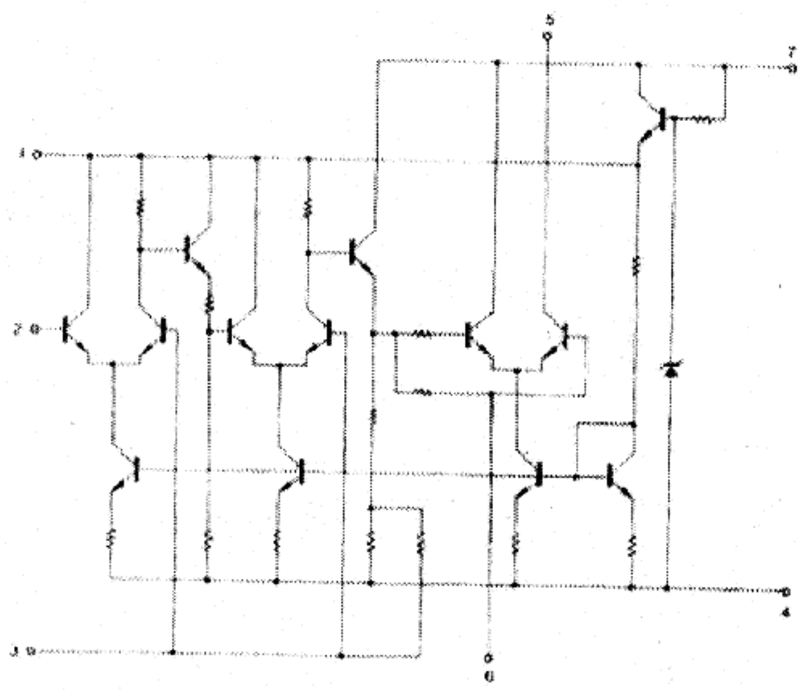

IC201: IG02920

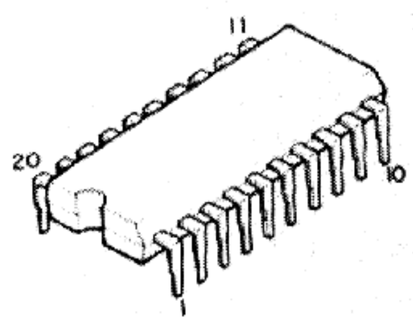

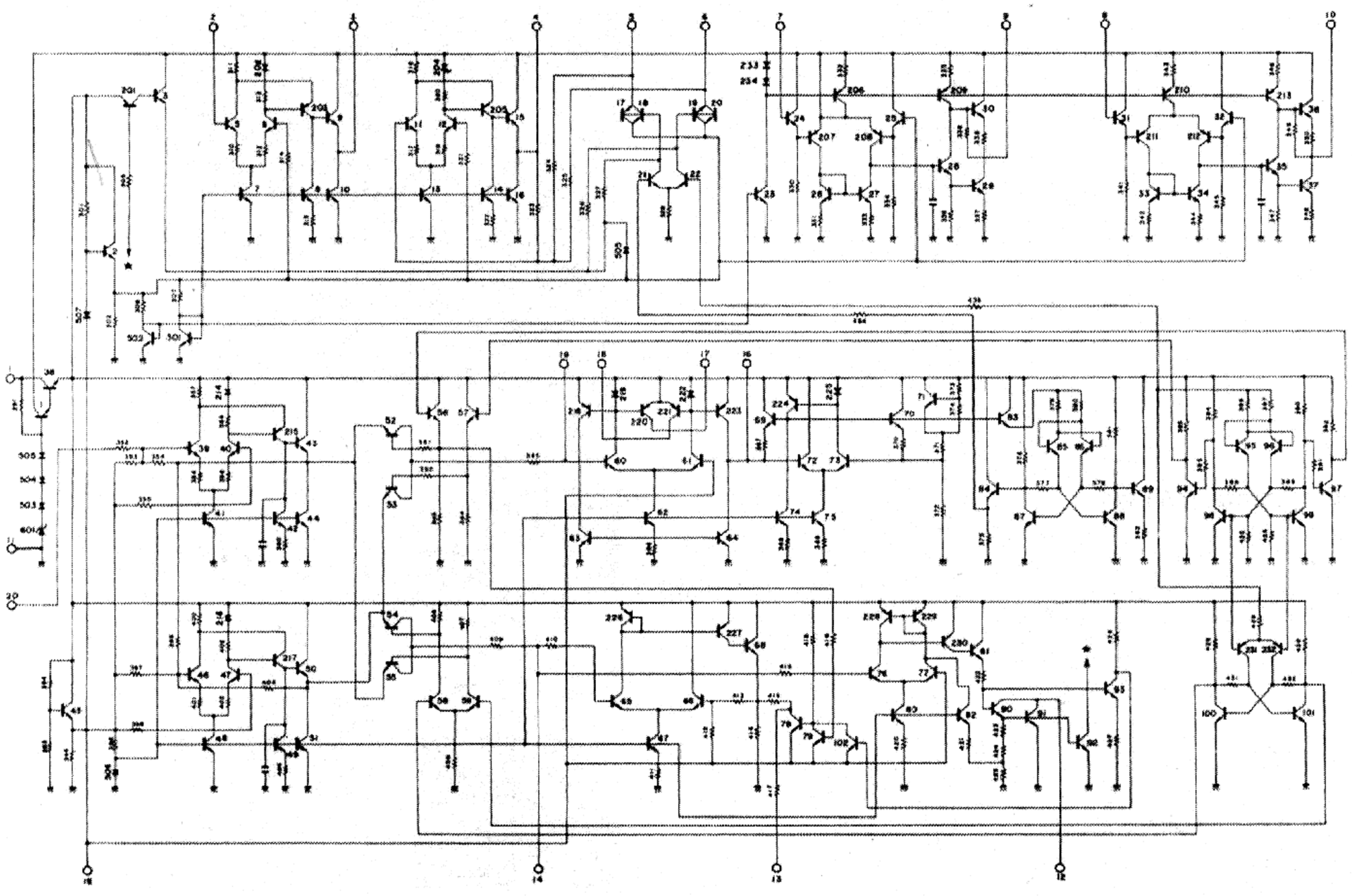

IC301: LA1240

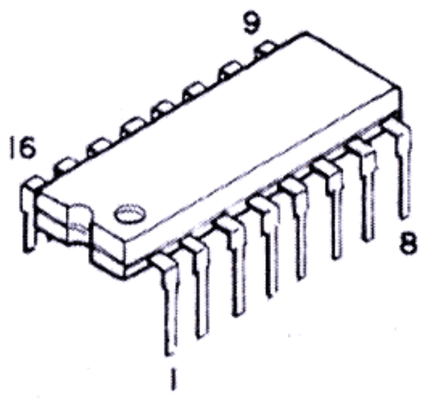

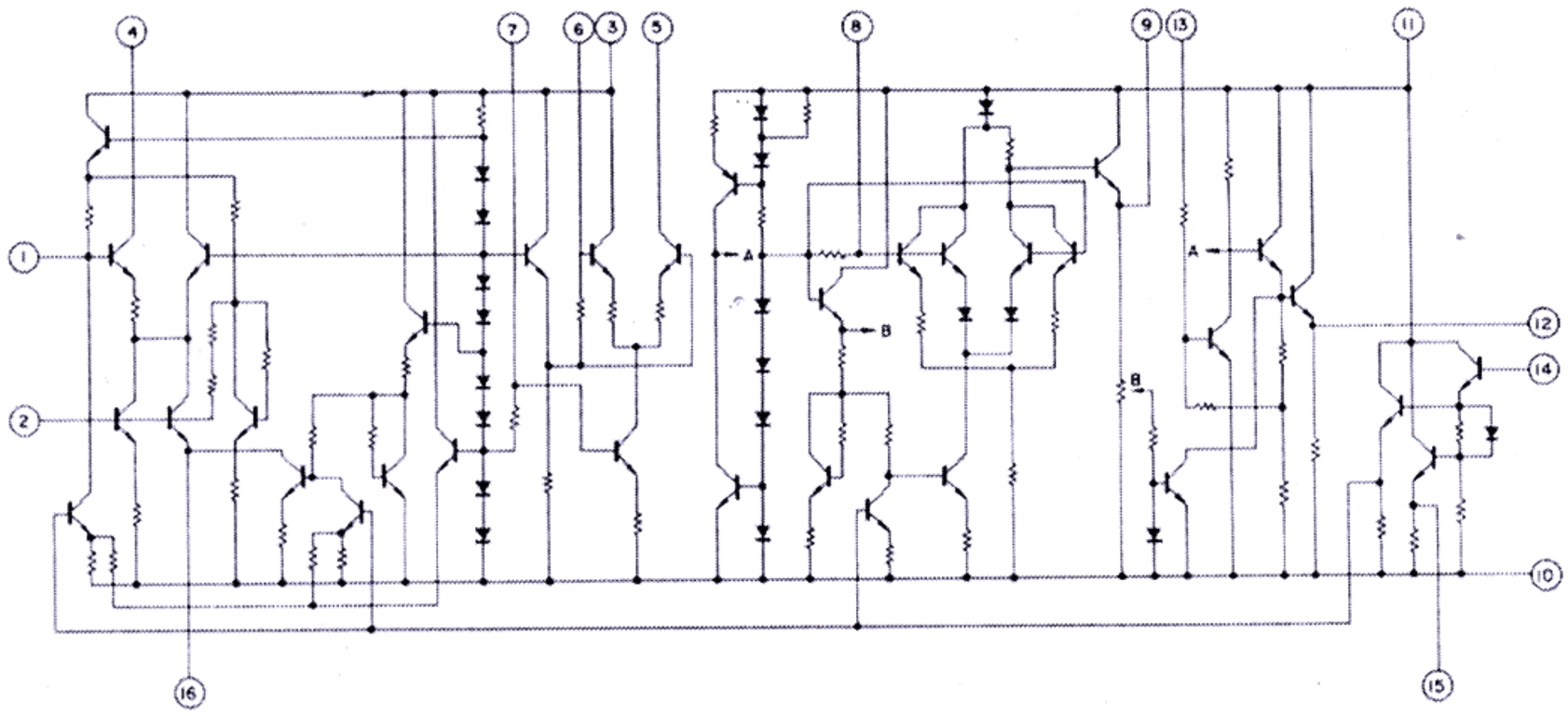

IC401: IG00164

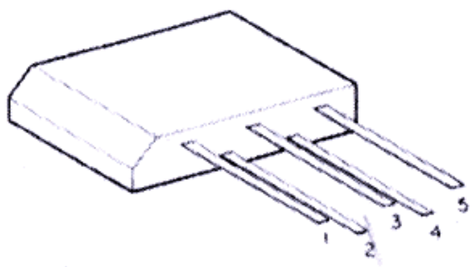

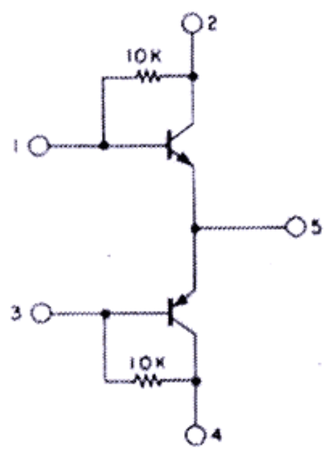

IC601, IC602: HA1457

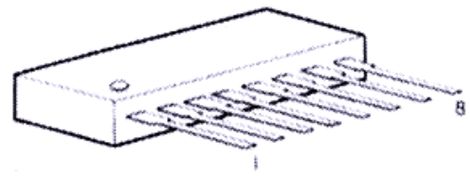

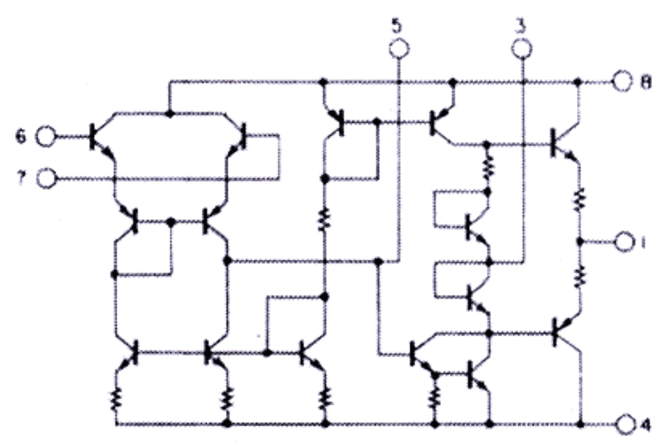

IC901, IC902: M51204

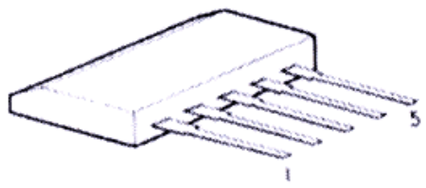

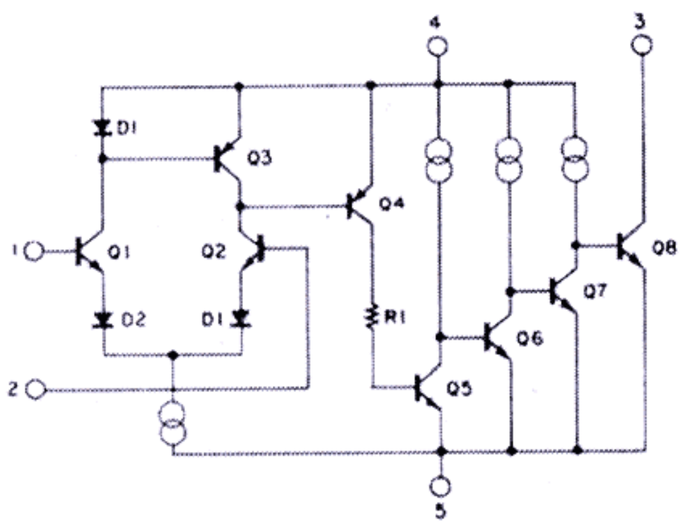

IC903: TA7318

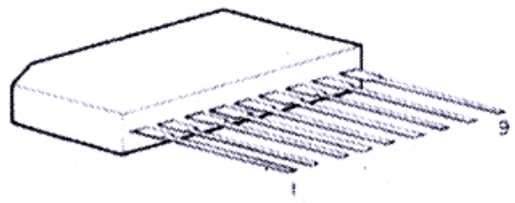

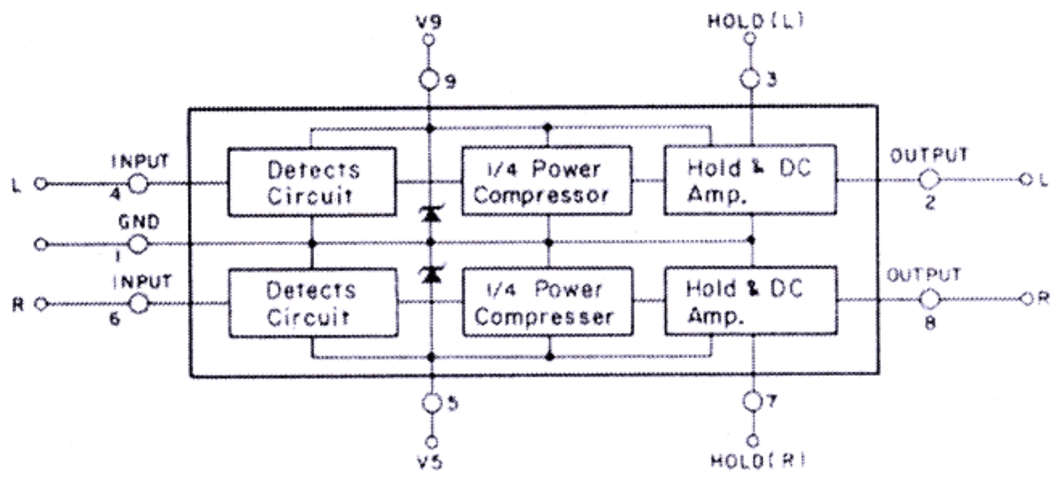

WIRING DIAGRAM

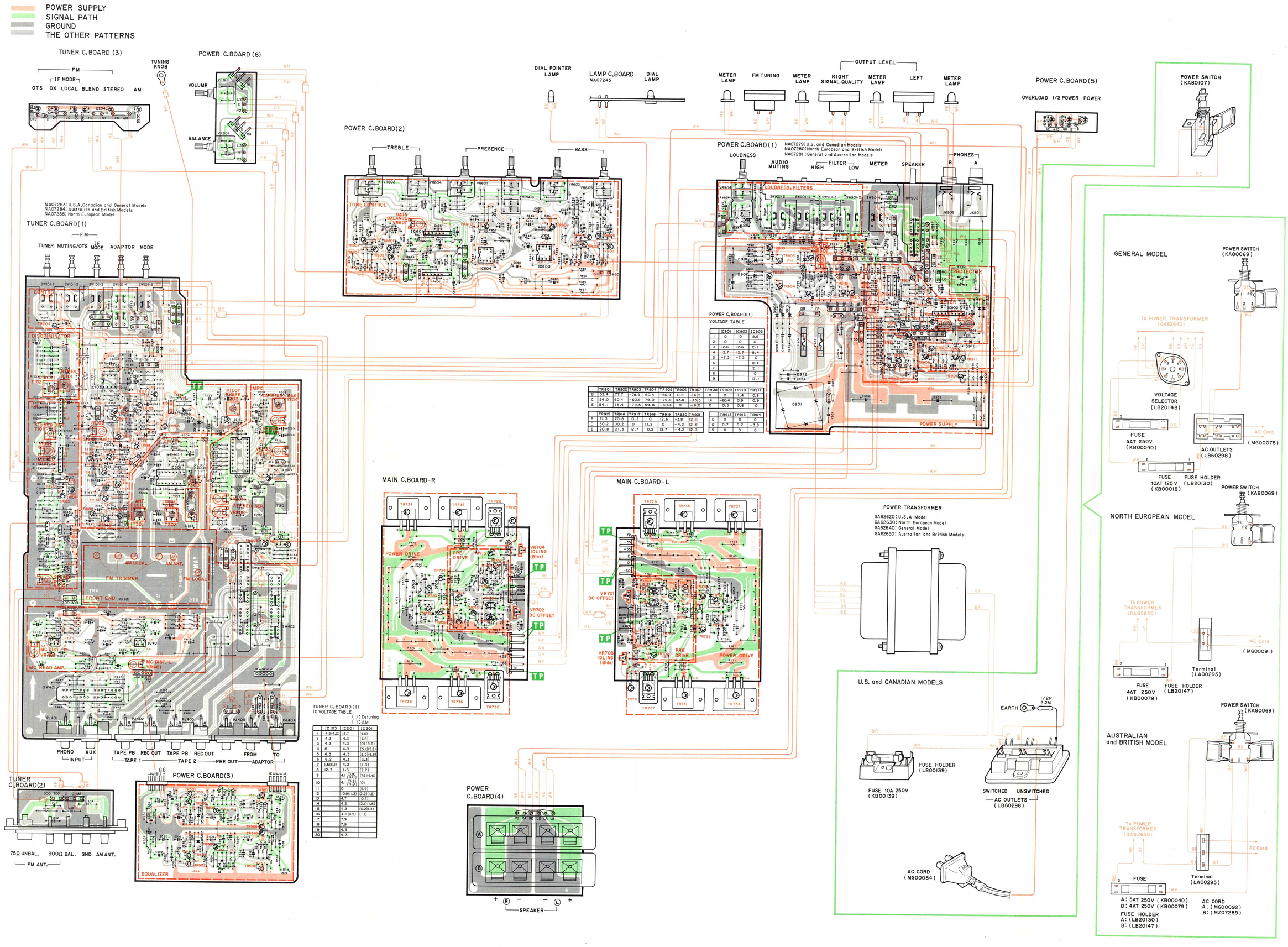

POWER C.BOARD(1) VOLTAGE TABLE

	IC901	IC902	IC903
1	0	0	8.5
2	0	0	0
3	12.6	12.6	2.1
4	12.7	12.7	8.4
5	−7.3	−7.3	0
6			8.4
7			2.1
8			0
9			17.1

	TR901	TR902	TR903	TR904	TR905	TR906	TR907	TR908	TR909	TR910	TR911
B	53.4	77.7	−78.9	60.4	−60.9	0.6	−6.5	0	0	1.4	0.8
C	54.0	60.4	−60.9	79.0	−79.9	43.8	−45.5	1.4	−60.4	0.9	0.9
E	54.1	78.4	−79.5	59.8	−60.4	0	−6.0	0	0.5	0.8	0

	TR915	TR916	TR917	TR918	TR919	TR920	TR921
B	21.3	20.8	13.2	0	12.6	−3.8	12.1
C	30.2	30.2	0	11.2	0	−4.2	12.6
E	20.8	21.3	12.7	0.2	12.7	−4.2	12.7

	TR912	TR913	TR914
D	0	0	0
S	0.7	0.7	−3.8
G	0	0	0

TUNER C.BOARD (1) IC VOLTAGE TABLE

( ): Detuning
[ ]: AM

	IC103	IC201	IC301
1	4.3(4.0)	(2.7	(4.6)
2	4.3	4.3	(1.8)
3	4.3	4.3	(0)(8.6)
4	0	4.3	(5.1)(5.2)
5	6.3	4.3	(8.5)(8.6)
6	6.2	4.3	(3.3)
7	1.5(6.1)	4.3	(1.3)
8	(2.7	4.3	(2.7)
9		4.1 (3.8) [4.5]	(7.6)(6.6)
10		4.1 (3.8) [4.5]	(0)
11		0	(9.9)
12		10.9(11.2)	(2.2)(1.6)
13		4.7	(0.7)
14		4.3	(2.1)(1.5)
15		4.3	(0.2)(0)
16		4.1 (4.5)	(1.1)
17		7.9	
18		7.9	
19		4.3	
20		4.3	

SCHEMATIC DIAGRAM

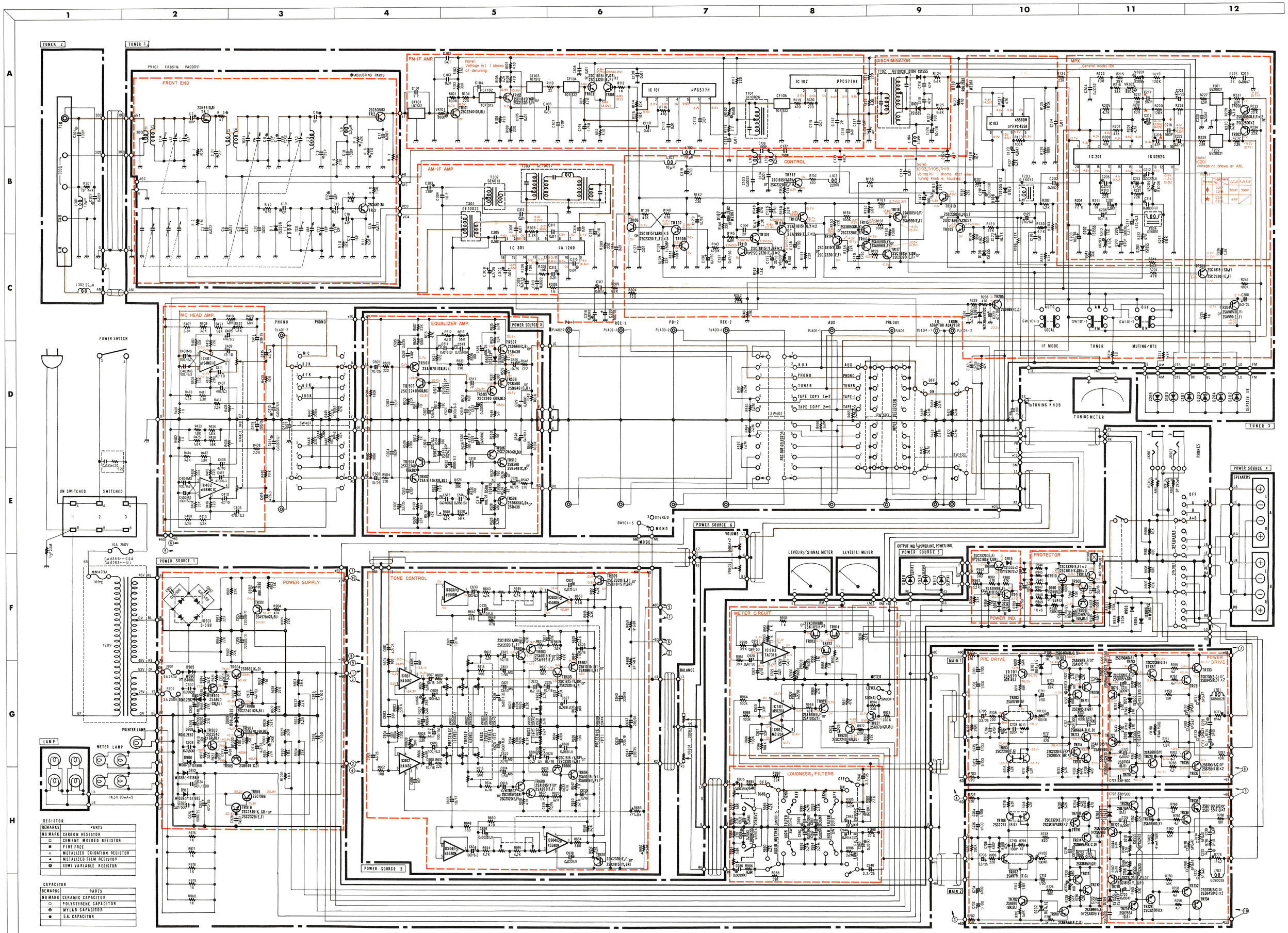

RESISTOR

REMARKS	PARTS
NO MARK	CARBON RESISTOR
□	CEMENT MOLDED RESISTOR
■	FIRE FREE
△	METALIZED OXIDATION RESISTOR
▲	METALIZED FILM RESISTOR
⊗	SEMI VARIABLE RESISTOR

CAPACITOR

REMARKS	PARTS
NO MARK	CERAMIC CAPACITOR
○	POLYSTYRENE CAPACITOR
⊕	MYLAR CAPACITOR
●	S.A. CAPACITOR

GENERAL MODEL

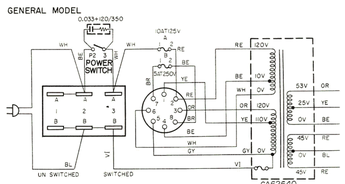

NORTH EUROPEAN MODEL

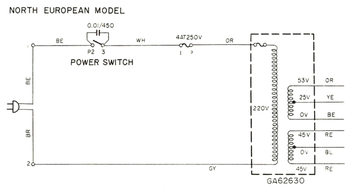

AUSTRALIAN and BRITISH MODELS

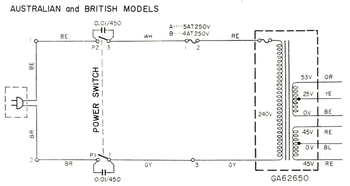

TRANSISTOR, DIODE CONNECTION

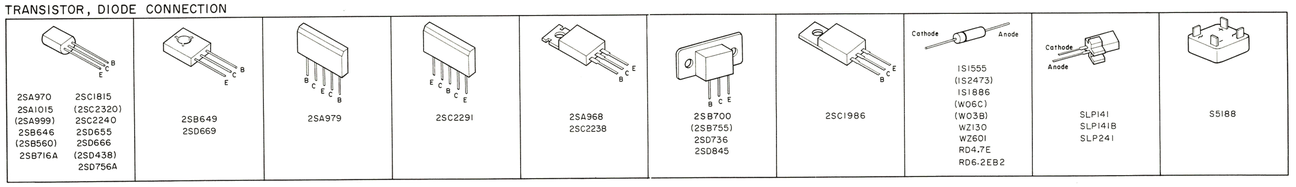
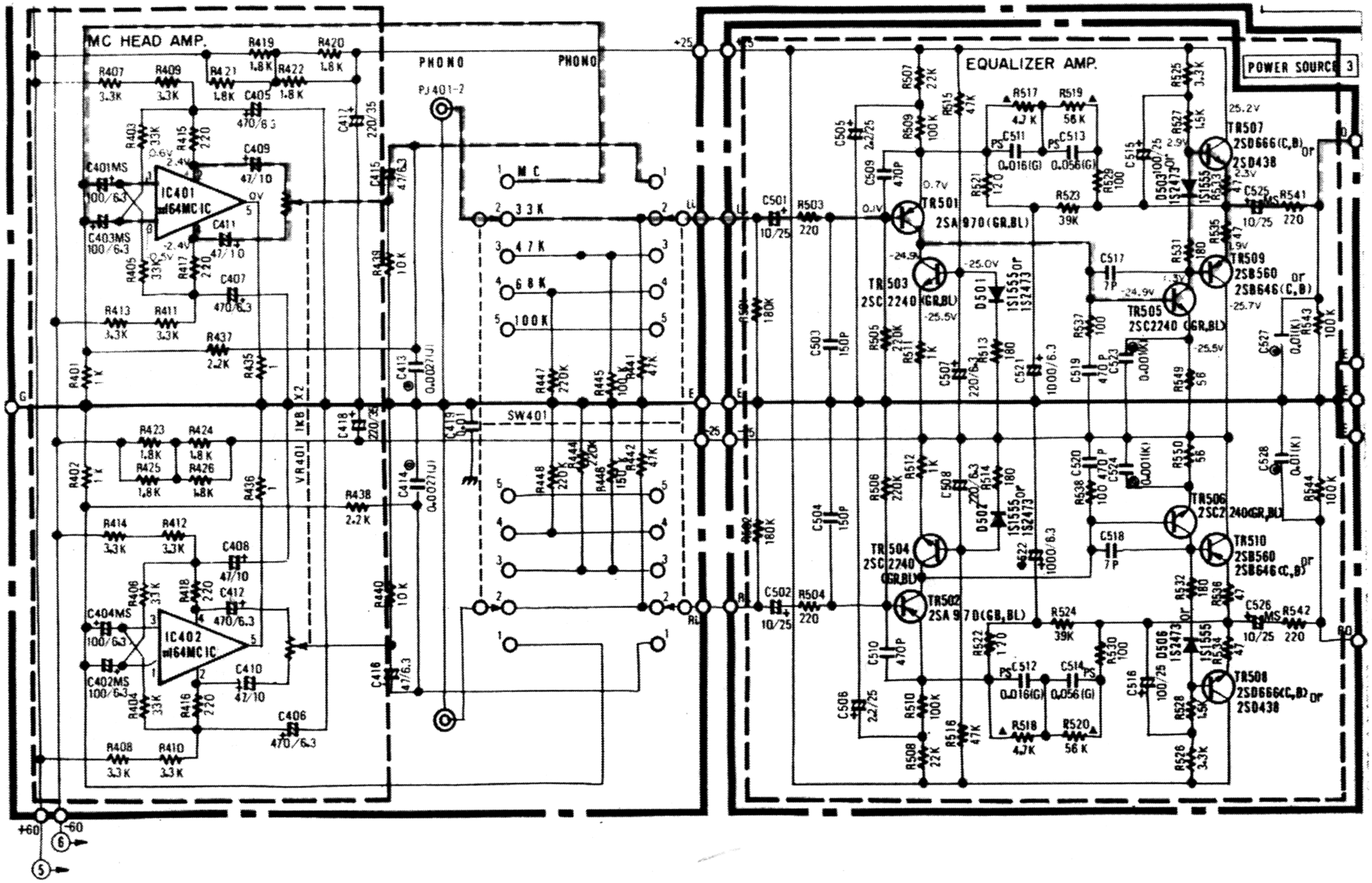
CR2040 PHONO AMP CIRCUITRY