AM/FM STEREO RECEIVER

SX-850

OPERATING INSTRUCTIONS

KCU

Walnut veneered top and side panels are used in the construction of this cabinet.

WARNING: TO PREVENT FIRE OR SHOCK HAZARD, DO NOT EXPOSE THIS APPLIANCE TO RAIN OR MOISTURE.

PIONEER

CONTENTS

Stereo System Composition 2
SX-850 Features 3
Connection Diagram 4
Connections 6
Antenna and Ground Connections 7
Front Panel Facilities 8
Prior to Switching Power ON 10
FM Reception 10
AM Reception 10
Playing Records 11
Using the AUX Jacks 11
Microphone 11
Tape Deck Operation 12
Adaptor Jacks for Increased Versatility 14
Employing PRE OUT and POWER IN Jacks 16
Conditions Frequently Mistaken for Malfunction 17
Specifications 18
Circuit Diagram ..... Insertion

STEREO SYSTEM COMPOSITION

- The SX-850 is heavy and should aways be handled with great care.
- Do not place equipment in locations that are unlevel or subject to vibration.
- Allow for good rear panel ventilation of components; avoid humidity and dust.
- Keep equipment away from radiators or other heat sources.

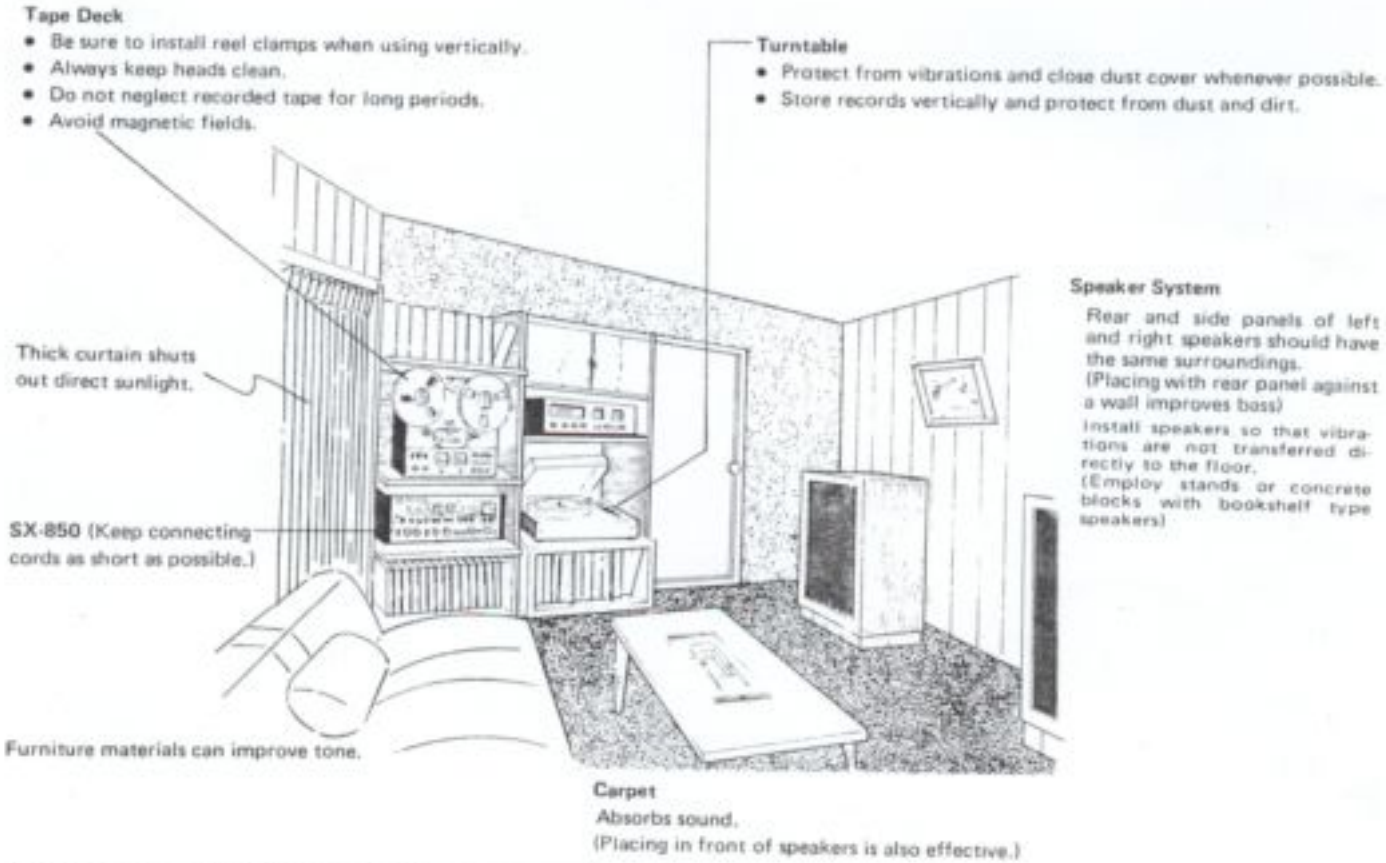

Listening position slightly to the rear of the apex of an equilateral triangle formed with left and right speakers.

SX-850 FEATURES

Latest Technology Front End

Dual Gate MOS FET (field-effect transistor) is employed in the FM front end, together with a 4-ganged variable tuning capacitor. Together with carefully selected circuit components, this provides outstanding performance in terms of sensitivity, image rejection and spurious rejection. In all of its specifications, the SX-850 FM tuner section compares favorably with the most respected separate component type tuners.

High Selectivity Stages

Excellent capture ratio, stable operation and sharp selectivity are assured by three ceramic filters in the IF stages. The filters never need realignment and contribute to high reliability against aging and ambient temperature variations.

Quadrature Detector and PLL MPX Demodulator

A balanced bridge differential amplifier performs quadrature detection of the FM signal. Linearity is assured throughout the frequency band, while distortion becomes minimized. Clear and stable separation is provided by the PLL (phase locked loop) multiplex circuit design.

Reduced Distortion AM Circuit

Careful engineering is also evident in the AM tuner circuit. Automatic gain control in the RF and IF stages, together with a 3-gang variable capacitor and IC circuitry deliver improved image ratio, selectivity and frequency response, plus reduced distortion.

Heavy Duty Split Power Supply

The dual positive and negative power supply incorporates extra large 15,000 μF electrolytic capacitors and posesses plenty of reserve power. Protection and muting functions are included to both safeguard equipment and eliminate power on-off noise.

Precision RIAA Phono Equalizer

Deviation from the RIAA standard is performed within ±0.3dB, while the ability of the phono inputs to accept relatively strong signal levels without distortion (200 mV rms) results in a wide dynamic range.

High Reliability Protection Circuit

In the event of malfunction, valuable semiconductors and speaker are protected by a relay electronic protection circuit that detects DC output voltage or impedance overload. This circuit also functions to reduce noise during ON-OFF operation of the power supply.

Versatile Tone Controls Plus Turn-over Selectors

Active NFB type bass and treble control circuits provide precise and stable control without affecting the mid-range. Turnover frequency selector switches determine the points at which the tone controls take effect, and a convenient tone on-off switch is also employed to allow a flat frequency response to be obtained at any time regardless of tone control and turnover switch settings. This is useful for checking the effects of the phono cartridge, speakers, listening room acoustics, etc. on the spaciousness of the sound.

Direct Coupled Power Amplifier

The power amplifier of the SX-850, is a direct-coupled, pure complementary parallel push pull circuit, which uses a differential amplifier at first stage. SX-850 delivers

Continuous power output of 65 watts* per channel, min. RMS, at 8 ohms or 85 watts* per channel at 4 ohms from 20 Hertz to 20,000 Hertz with no more than 0.1% total harmonic distortion.

Plenty of power is available for rich and stable stereo reproduction.

Important Additional Features

Two tape monitor circuits allow two stereo tape decks to be used for recording, playback and tape duplication.

Microphone input on the front panel adds to versatility and enjoyment.

The audio muting switch can be used to temporarily reduce the volume by 20dB when changing records or tapes or for other reasons, without continually adjusting the volume control.

Indicator lamps provide clear indication of operating mode.

Tasteful Styling Complements High Performance

The exquisitely designed aluminum front panel is trimmed with solid walnut. Control functions and layout also add to both versatility and top grade components appearance. In combination with high quality source components and speaker systems, a magnificent stereophonic music system is composed for providing rich audio enjoyment.

** Measured pursant to Federal Trade Commission's Trade Regulation rule on Power Output Claims for Amplifiers.*

1. SPECIFICATIONS

Semiconductors

FETs 3
ICs 3
Transistors 56
Diodes 36

Power Amplifier Section

Continuous Power Output form 20 Hertz to 20,000 Hertz
(Both channels driven) . . 65 watts per channel (8 ohms)
85 watts per channel (4 ohms)

Total Harmonic Distortion
(20 Hertz to 20,000 Hertz, from AUX)
Continuous Rated Power Output. . . No more than 0.1%
33 watts per channel power
output, 8 ohms . . . . . No more than 0.05%
1 watt per channel power
output, 8 ohms . . . . . No more than 0.05%

Intermodulation Distortion
(50 Hertz: 7,000Hertz=4:1, from AUX)
Continuous Rated Power Output. . . No more than 0.1%
33 watts per channel power
output, 8 ohms . . . . . No more than 0.05%
1 watt per channel power
output, 8 ohms . . . . . No more than 0.05%

Frequency Response . . . . . 7Hz to 90,000Hz $^{+0}_{-1}$dB

Input Sensitivity/Impedance
POWER AMP IN . . . . . .1 V/50k ohms

Output
Speaker . . . . . A, B, A+B
Headphone . . . . . Low Impedance

Damping Factor
(20Hz to 20,000Hz, 8 ohms) 25

Hum and Noise (IHF, short-circuited, A Network) . .100dB

Preamplifier Section

Input (Sensitivity/Impedance)
PHONO 1 . . . . . 2.5mV/50k ohms
PHONO 2 . . . . . 2.5mV/50k ohms
MIC . . . . . 6.5mV/50k ohms
AUX . . . . . 150mV/50k ohms
TAPE PLAY 1 . . . . . 150mV/50k ohms
TAPE PLAY 2 . . . . . 150mV/50k ohms
TAPE PLAY 2 (DIN connector) . . . 150mV/50k ohms

PHONO Overload Level (T.H.D. 0.1%)
PHONO 1 . . . . . 200mV (1kHz)
PHONO 2 . . . . . 200mV (1kHz)

Output Level/Impedance
TAPE REC 1 . . . . . 150mV
TAPE REC 2 . . . . . 150mV
TAPE REC 2 (DIN connector) . . . . 30mV/80k ohms
PRE OUT . . . . . 1V/100 ohms

Total Harmonic Distortion
(20Hz to 20,000Hz 1V output). . . No more than 0.05%

Frequency Response
PHONO (RIAA equalization) .30Hz to15,000Hz ±0.2dB
AUX, TAPE PLAY . . . . . 10Hz to 50,000Hz $^{+0}_{-1}$dB

Tone Control
BASS . . . . . ±7dB/±10dB (100Hz)
Turnover Frequency 200Hz/400Hz
TREBLE . . . . . ±7dB/±10dB (10kHz)
Turnover Frequency 5kHz/2.5kHz

Filter
LOW 30Hz (6dB/oct.)
HIGH 6kHz (6dB/oct.)

Loudness Contour (Volume control set
at −40dB position) . . . . +6dB (100Hz), +3dB (10kHz)

Hum and Noise
(IHF, short-circuited, A Network, rated power)
PHONO 70dB
AUX, TAPE PLAY 90dB

Muting . . . . . −20dB

FM Section

Usable Sensitivity . . .
MONO 10.3dBf (1.8μV)
STEREO 22.2dBf (7.1μV)

50dB Quieting Sensitivity . . .
MONO 17.2dBf (4.0μV)
STEREO 38.0dBf (44μV)

Signal to Noise Ratio at 65dBf . MONO 72dB
STEREO 67dB

Distortion at 65dBf 100Hz . . . MONO. 0.15%
STEREO 0.3%
1kHz . . . . MONO 0.15%
STEREO 0.3%
6kHz . . . . MONO 0.4%
STEREO 0.4%

Frequency Response . . . . . 30HZ to 15,000Hz $^{+0.3}_{-2.0}$dB
Capture Ratio 1.0dB
Alternate Channel Selectivity 80dB
Spurious Response Ratio 100dB
Image Response Ratio 85dB
IF Response Ratio 100dB
AM Suppression Ratio 55dB
Muting Threshold 14.0dBf (2.8μV)
Stereo Separation . . .40dB (1kHz), 30dB (30Hz ~ 15kHz)
Subcarrier Product Ratio 62dB
SCA Rejection Ratio 62dB
Antenna Input . . . . . 300 ohms balanced
75 ohms unbalanced

AM Section

Sensitivity (IHF, Ferrite antenna) 300μV/m
(IHF, Ext. antenna) 15μV
Selectivity 35dB
Signal to Noise Ratio 50dB
Image Rejection 40dB
IF Rejection 65dB
Antenna . . . . . Built-in Ferrite Loopstick Antenna

Miscellaneous

Power Requirements 120V 60Hz
Power Consuption . . . . . .UL; 180W, 420W (max.)
CSA; 400VA
Dimensions . . . . . 526.6(W)x173(H)x411.5(D) mm
20-3/4(W)x6-13/16(H)x16-3/16(D) in
Weight Without package . . . . . 19.1 kg (42 lb 3oz)
With package . . . . . 22.4kg (49 lb 6oz)

Furnished Parts

FM T-type Antenna 1
Operating Instructions 1
Hex. Wrench 1

NOTE:
Specifications and the design subject to possible modification without notice due to improvements.

HEX WRENCH

The accessory hex. wrench is provided for removing the TUNING knob or tightening its setscrew in event it becomes loose.
If required, loosen the setscrew by inserting the wrench into the hole on the side of the knob and turning the wrench counterclockwise. Be particularly careful not to scratch the front panel when employing the wrench.

2. FRONT PANEL FACILITIES

SPEAKER BUTTONS

Two sets of speaker terminals, A and B, are provided on the rear panel, and the required speaker systems can be selected by depressing the SPEAKERS buttons as follows:

A . . . . . Speaker systems A operate
B . . . . . Speaker systems B operate

NOTES:
1. *When any two buttons (A and B) are depressed simultaneously, the corresponding pairs of speaker systems will come into operation.*
2. *For private listening through headphones, return all the SPEAKERS buttons to the OFF (undepressed) position.*

PHONES OUTPUT JACK

Accepts stereo headphones.

POWER SWITCH

After turning this switch ON there is a delay of some 3 to 6 seconds, during which time the protection circuit operates to eliminate unpleasant noise.

BASS CONTROL

Clockwise rotation gives stronger emphasis to the bass range below the turnover frequency (which is selected by the BASS TURNOVER switch), while counterclockwise rotation reduces bass response.

BASS TURNOVER SWITCH

This selects the frequency below which the bass tone control will begin to act. This "turnover" frequency can be set at 400Hz or 200Hz, to match the characteristics of the room, the program material, or your personal listening preferences.

TONE SWITCH

In the OFF (up) position, this switch causes the amplifier section to operate with a flat frequency response regardless of the tone control setting.

TREBLE TURNOVER SWITCH

This switch selects the frequency above which the treble tone control will begin to act. This "turnover" frequency can be set at 2.5kHz or 5kHz, to match the characteristics of the room, the program material, or your personal listening preferences.

TREBLE CONTROL

Clockwise rotation gives stronger emphasis to the high range above the turnover frequency (selected by the TREBLE TURNOVER switch), while counterclockwise rotation reduces high-range response.

FM TUNING METER

With the SIGNAL meter needle deflected to the right, make fine adjustment by centering the FM TUNING meter needle (indicating optimum reception).

SIGNAL METER

For AM and FM station tuning.

AM tuning: Tune for maximum deflection of the SIGNAL meter needle to the right.

FM tuning: Both the SIGNAL and FM TUNING meters work together

SPEAKER SYSTEM INDICATOR

FM STEREO INDICATOR

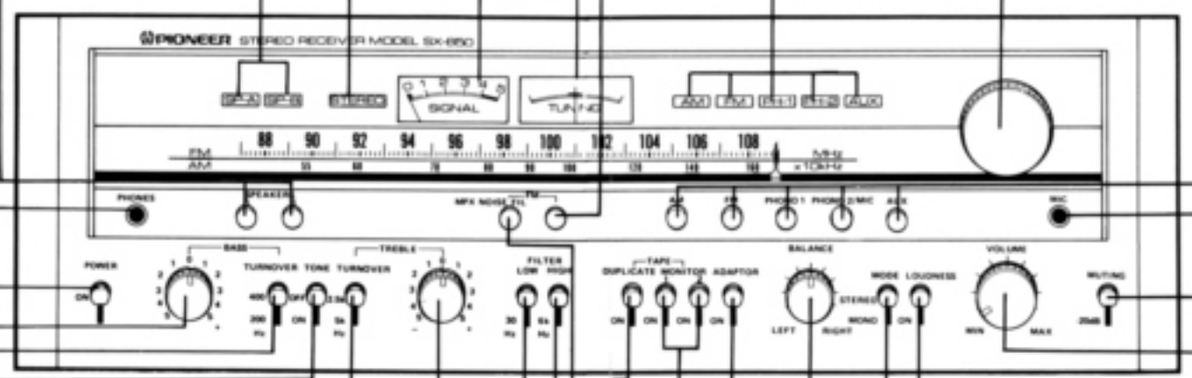

LOW CUT FILTER SWITCH

When low-pitched rumble (from turntable motor or other source) is obstructive, set this switch to the 30Hz position to provide 6dB/octave attenuation at frequencies below 30Hz. If no interference is experienced, set in the up position.

HIGH CUT FILTER SWITCH

When high frequency scratch noise (from worn records or other source) is unpleasant, set this switch to the 6kHz position to provide 6dB/octave attenuation at frequencies above 6kHz. If there is no interference, set in the up position.

MPX NOISE FILTER BUTTON

Comparatively high frequency noise, incurred when receiving weak FM stereo signals, can be eliminated by depressing this button to ON. In this case however, there will be some loss of stereo separation.

FM MUTING BUTTON

Leave this button undepressed (in the ON position) to suppress unpleasant interstation noise while tuning between FM stations. Low-strength signals may also be suppressed by this function, so to pick up a weak station depress this button to the OFF position.

TUNING KNOB

Select the station and tune for optimum reception by observing the SIGNAL meter for AM stations, and both SIGNAL and TUNING meters for FM stations.

PROGRAM SOURCE INDICATOR

ADAPTOR SWITCH

When employing adaptor components, such as a graphic equalizer adaptor, RG processor, or Dolby NR adaptor, set this ADAPTOR switch to ON.

TAPE MONITOR (1 & 2) SWITCHES

Set these switches to the ON (down) position as follows:

1 . . . . . With a tape deck connected to the TAPE 1 jacks (REC and PLAY), either playback or monitoring of a recording in progress are possible.

2 . . . . . Same as in 1 above, with a tape deck connected to the TAPE 2 jacks (REC & PLAY, or REC/PLAY jack).

For normal use, leave in the OFF (up) positions.

TAPE DUPLICATE SWITCH

Set this switch in the ON (down) position to duplicate or edit a recorded tape using two tape decks.

FUNCTION SELECTOR BUTTONS

To select the program source, push the buttons as follows:

AM . . . . . For AM broadcast reception.

FM . . . . . For AM broadcast reception.
For FM stereo reception. Automatically receives monophonically during FM monophonic broadcasts. The STEREO indicator lights up when the broadcast is in stereo.

PHONO 1 . . . . To operate a turntable connected to the PHONO 1 input jacks.

PHONO 2/MIC . As above for PHONO 2 jacks, or for reproduction through a microphone connected to the MIC jack on the front panel. Note: when the microphone is plugged in the turntable connected to the PHONO 2 jacks cannot be used.

AUX . . . . . For listening to an audio component (cartridge tape player, TV sound tuner, etc.) connected to the AUX input jacks.

NOTE: Only one FUNCTION button should be depressed at a time.

MIC JACK

Accepts a standard 6 ϕmm microphone plug.

AUDIO MUTING SWITCH – 20dB

Set to –20dB to attenuate the audio output by 20dB. This convenient feature saves having to disturb the VOLUME control, for example when answering the telephone.

VOLUME CONTROL

Governs the level of sound outputs both from the speaker systems and from headphones.

LOUDNESS SWITCH

Set to ON when listening at low volume. The frequency response of the human ear varies according to the listening volume, and the ON position compensates for hearing response by emphasizing the bass and treble.

MODE SWITCH

Set to STEREO for normal stereo operation. When set to MONO, left and right channel signals will be mixed and reproduced monophonically from both speaker systems.

NOTE:
Recording stereophonically with the MODE switch in the MONO position may cause channel separation to deteriorate.

BALANCE CONTROL

Adjusts the balance between the sound volume from the left and right speaker systems or headphones.

3. CONNECTION DIAGRAM

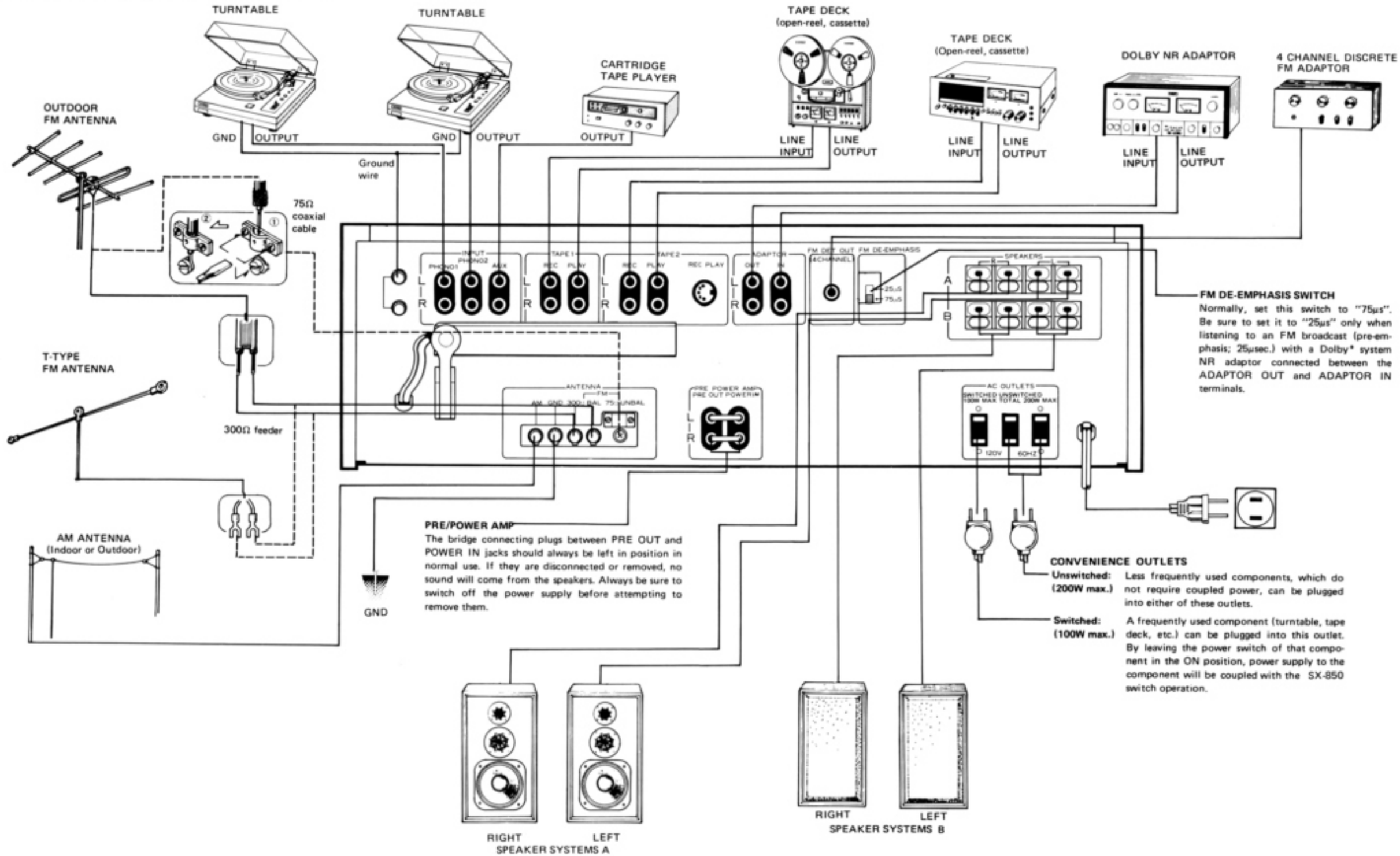

PRIOR TO SWITCHING POWER ON

Before switching on the power, set the various controls as follows:

Depress the SPEAKERS (A and B) button according to the employed terminals

Release the FM MPX NOISE FIL and FM MUTING OFF buttons

Turn the MUTING switch OFF (up)

POWER SWITCH

Set the TREBLE and BASS controls to the midway positions (the "0" positions)

Turn the TAPE MONITOR (1 & 2) and ADAPTOR switches to OFF (up)

Set the VOLUME control to MIN (fully counterclockwise)

Turn the MODE switch to STEREO (up)

Set the BALANCE control to the midway position

FM RECEPTION

1. Depress the FM selector button.
2. Set the FM MUTING OFF button to ON(undepressed). Note, however, that in areas of low signal strength the signal may be suppressed. In this case only, the FM MUTING OFF should be depressed.
3. Select the station by means of the TUNING knob.
   Best reception is obtained when the SIGNAL meter needle deflects to the extreme right, and the TUNING meter needle is exactly in the center, as shown in Fig. 8. If the broadcast is stereophonic, the STEREO indicator lamp will come on; it will not illuminate for monophonic broadcasts.
4. Adjust the sound level by means of the VOLUME control, and use the BASS and TREBLE controls to give the required tone quality.

AM RECEPTION

1. Depress the AM selector button.
2. Turn the TUNING knob to select your station. Best reception is obtained when the SIGNAL meter needle deflects to the extreme right(Fig. 9).
3. Adjust the VOLUME, BASS and TREBLE controls for the listening level and tone quality of your preference.

NOTE:
If, when listening to either FM or AM broadcasts, listening pleasure is seriously affected by poor sensitivity or strong interference, refer to the section "ANTENNA AND GROUND CONNECTIONS," on page 7 and make any necessary changes.

FM Reception

Fig. 8

AM Reception

Fig. 9

PLAYING RECORDS

1. Set the FUNCTION selector to either PHONO 1 or PHONO 2/MIC, depending upon which input jacks the turntable is connected to.
2. Operate the turntable to play the record.
3. Adjust the VOLUME, BASS, and TREBLE controls for the listening level and tone quality of your preference.

NOTES:

1. If a microphone is connected to the MIC jack, it will override the PHONO 2 inputs signal.

2. In order to eliminate the unpleasant noise which can mark the start of a record, set the AUDIO MUTING switch to −20dB, releasing it after the stylus has completed the run-in, and then adjust the VOLUME to give the sound level of your choice.

USING THE AUX JACKS

To play equipment connected to the AUX jacks, proceed as follows:

1. Set the FUNCTION selector by depressing the AUX button.
2. Operate the attached component.
3. Adjust the VOLUME, BASS, and TREBLE controls for the listening level and tone quality of your preference.

MICROPHONE

1. Connect the microphone to the MIC jack.
2. Set the FUNCTION selector by depressing the PHONO 2/MIC button.
3. Adjust the sound level by turning the VOLUME control gradually to the right. The midway setting of the BASS and TREBLE controls will usually give best results.

NOTES:

1. Monophonic sound can be heard from both left and right channel speaker systems.

2. Under certain conditions the microphone is liable to give rise to "howling" or feedback noise. Be careful not to raise the volume too high when the microphone is close to the speaker systems or in a room with a great deal of resonance. This tendency can be reduced by setting the TREBLE and BASS controls to their "0" positions, or by switching the TONE switch OFF (up).

PROTECTION CIRCUIT

For some 3 to 6 seconds after the receiver is switched ON, no sound will heard. This is due to the operation of protection circuits which are designed to safeguard transistors and speakers from possible damage, due chiefly to switching transients, etc. Should the receiver remain silent for considerably longer than this, switch off and check the speaker system connections. Should the receiver suddenly go silent while you are listening to it, and a continuous series of "clicks" can be heard due to relay contacts opening and closing within the receiver, this can be an indication of a short circuit in the speaker system connections. Switch off, and re-check the speaker system impedances, etc.

The protection circuit re-sets itself automatically, so that normal operation is resumed as soon as the fault is cured.

TURNOVER SWITCHES

The SX-850 provides two special bass and treble turnover frequency selector switches. Each switch and two numbers, the BASS 400 and 200Hz, the TREBLE 2.5k and 5kHz, which show the frequencies at which the BASS and TREBLE controls begin to act.

Fig. 10 shows the response curves indicating the relation between the TURNOVER switches and the TREBLE controls.

These are a very convenient way of adjusting the tone quality to suit the characteristics of the room, the program source, the cartridge characteristics or your personal taste, etc.

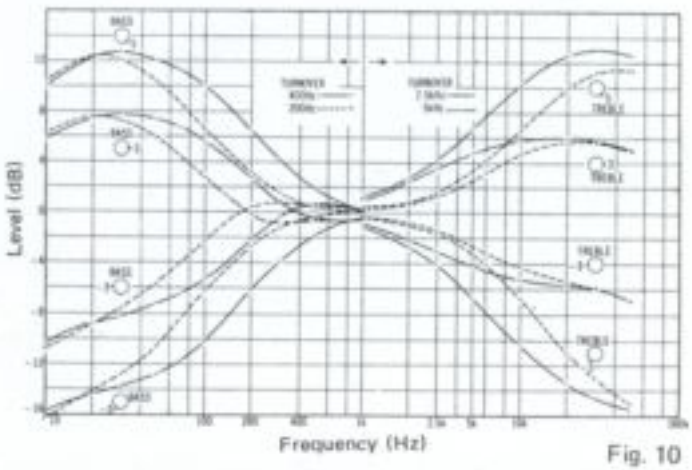

Fig. 10

TAPE DECK OPERATIONS

TAPE DECK CONNECTIONS

Two sets of recording output jacks (TAPE 1, 2 REC) and two sets of playback input jacks (TAPE 1, 2 PLAY) are provided, plus a DIN-type recording/playback jack (TAPE 2 REC/PLAY). This means that in addition to normal recording and playback, two decks can be used to record at the same time, or to "dub" or duplicate recordings from one tape deck to the other.
Use the connecting cord(s) provided with the tape deck(s) to make the connections (see Fig. 11).
A tape deck can also be connected to the ADAPTOR jacks.

Connections for Recording

- The receiver output TAPE 1 REC jacks are connected to the recording input jacks (LINE INPUT) of the tape deck as shown in Fig. 11. The upper jack of each pair is the L (left) channel and the lower is the R (right) channel.
- When the tape deck is provided with a DIN-type connector for recording and playback, use an optional recording/playback cord (Fig. 12).

NOTE:
As the recording/playback cord connects both recording and playback functions at the same time, there is no need to make separate connections to either TAPE 2 REC output jacks or TAPE 2 PLAY input jacks. If the ADAPTOR OUT jacks are to be used, connect them to the tape deck input (LINE INPUT) jacks.

- When using two tape decks, the second tape deck should be connected to the receiver TAPE 2 REC output jacks. If, however, the first deck has been connected to the DIN-type recording/playback jack, the second deck should be connected to the TAPE 1 REC output jacks.

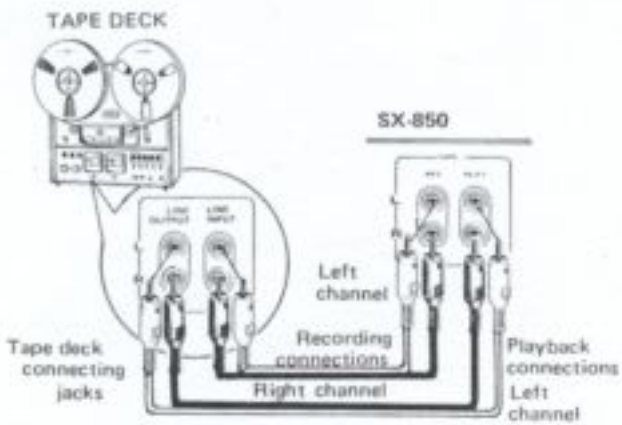

TAPE DECK CONNECTION

Fig. 11

Connections for Playback

- Connect the receiver TAPE 1 PLAY input jacks to the playback output jacks (LINE OUTPUT or TAPE MONITOR) on the tape deck. The upper jack of each pair is the L (left) channel, and the lower is the R (right) channel.

NOTE:
If the ADAPTOR IN jacks are to be used, connect them to the tape deck output (LINE OUTPUT) jacks.

- When using two tape decks, the second tape deck should be connected to the receiver TAPE 2 PLAY input jacks. If, however, the first deck has been connected to the DIN-type recording/play back jack (TAPE 2 REC/PLAY), the second deck should be connected to the TAPE 1 PLAY input jacks.

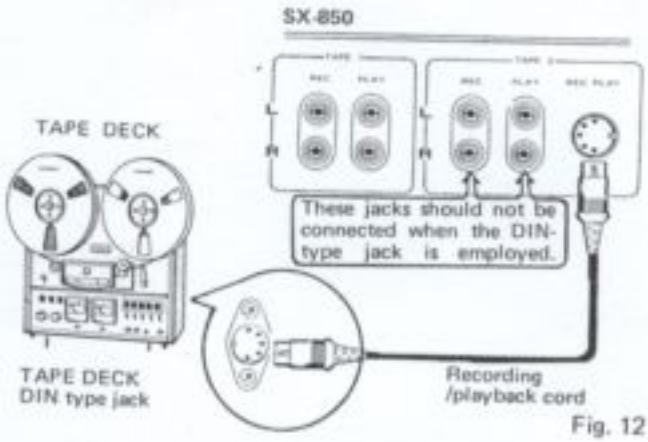

Fig. 12

OPERATIONS

Playback

1. According to the TAPE PLAY (1, 2) or ADAPTOR IN jacks to which the tape deck is connected, either the TAPE MONITOR 1 or 2 switches or the ADAPTOR switch should be set to ON (see Figs. 13 and 14).
2. Operate the tape deck controls for playback.
3. Adjust the VOLUME, BASS, and TREBLE controls for the listening level and tone quality of your preference.

NOTE:
Setting the TAPE MONITOR switch to ON enables tape playback whatever the setting of the FUNCTION selector.

Fig. 13

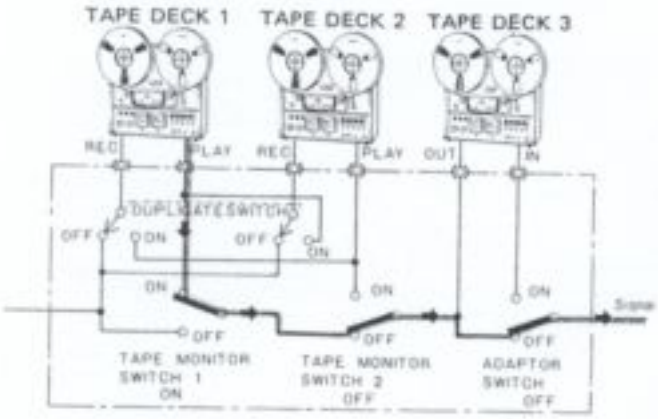

Fig. 14

Recording

As shown in Fig. 15, the receiver TAPE REC (1, 2) and ADAPTOR OUT jacks carry a certain fixed level output from the source selected by the FUNCTION selector, which once the tape deck is connected to the appropriate jacks, enables the selected source to be recorded.

The operation is as follows:

1. Set the FUNCTION selector button for the source to be recorded.
2. Play the selected program source.
3. Adjust the recording level by means of the controls on the tape deck and commence recording.

NOTE:
The receiver VOLUME, BASS, and TREBLE controls are completely inoperative — that is they have no affect on the recorded sound — when recordings are being made.

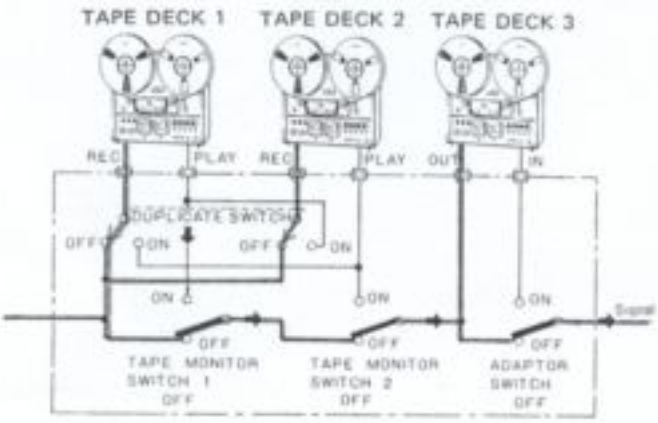

Fig. 15

Tape Monitoring

While a recording is being made on a three-head deck, the recorded sound can be monitored through the speaker systems if the TAPE MONITOR switch is turned ON.

In this case both recording and playback connections must be made.

Duplicating or Editing Recorded Tapes

By using two tape decks, a recording of, say, a complete FM broadcast can be made, and then those items which you want for your permanent "tape library" can be selected and re-recorded onto another tape.

1. Connect the two tape decks as shown in Fig. 16.
2. Set the TAPE DUPLICATE switch to the ON position.
3. Select one of the tape decks (1 or 2) to playback the pre-recorded tape, and use the other tape deck to make the copy recording.
4. When recording with tape deck 1, TAPE MONITOR switch 1 should be switched ON to monitor the sound being recorded, and when recording with deck 2, TAPE MONITOR switch 2 should be switched ON for monitoring (refer again to Fig. 16).

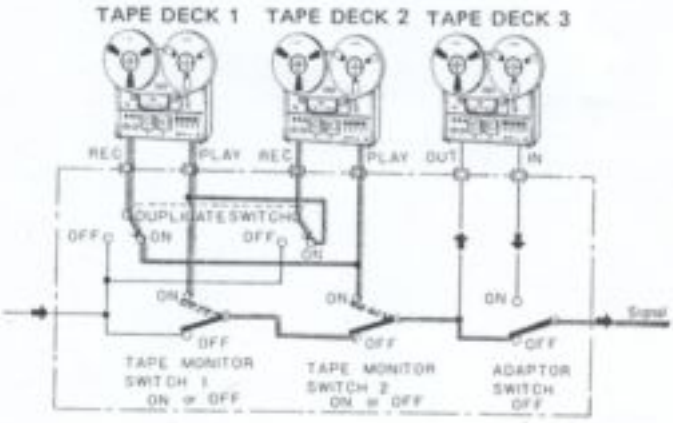

Fig. 16

ADAPTOR JACKS FOR INCREASED VERSATILITY

USE OF DOLBY ADAPTOR

If a Dolby adaptor is connected to the receiver ADAPTOR jacks, not only can FM Dolby broadcasts be played back, but if a tape deck is connected to the adaptor itself, Dolby system recording and playback are available.

RECEPTION OF FM DOLBY BROADCASTS.

Dolby system FM broadcasts can be received by making the following connections:

1. Set the DE-EMPHASIS switch on the rear panel of the receiver to "25μs" position.
2. Connect the Dolby adaptor as shown in Fig. 17, to the ADAPTOR IN and OUT jacks.
3. Set the FUNCTION selector to FM by depressing the FM button, and tune in to an FM Dolby system broadcast.
4. Turn the ADAPTOR switch ON.

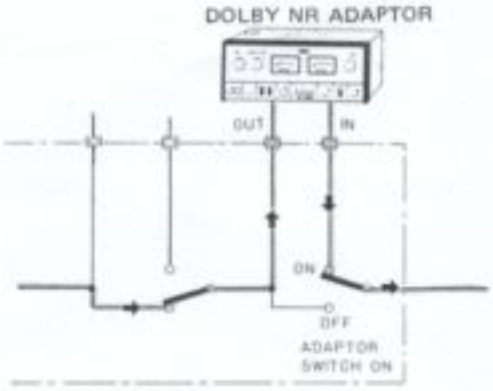

Fig. 17

Dolby Recording

1. As shown in Fig. 18, connect the Dolby adaptor output jacks to the tape deck recording input jacks (LINE INPUT).
2. Select the program source of your choice with the FUNCTION selector.

NOTE:
If you wish to monitor the sound being recorded with the Dolby adaptor, turn the ADAPTOR switch ON.

Dolby Playback

1. Connect the tape deck playback output jacks (LINE OUTPUT) to the input jacks of the Dolby adaptor.
2. Turn the ADAPTOR switch ON, and playback your Dolby system recordings.

NOTE:
For detailed instructions on connections, etc., please see the instruction manual provided with your Dolby adaptor.

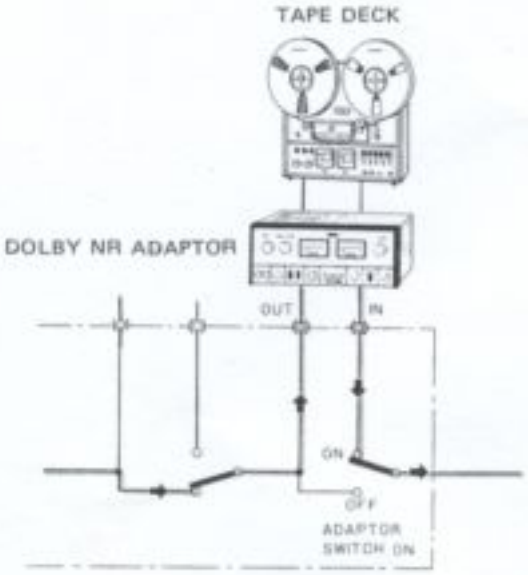

Fig. 18

OTHER ADAPTORS CURRENTLY AVAILABLE

The provision of these convenient adaptor jacks in addition to the normal tape REC/PLAY jacks, enables other sophisticated adaptor units (e.g. a graphic equalizer, RG dynamic processor, etc.) to be connected without forfeiting the full tape monitoring and duplicating facility. When using an adaptor, the program source can be taken from the function selector or the tape deck output terminals. Fig. 19 illustrates an RG dynamic processor connected to the ADAPTOR jacks.

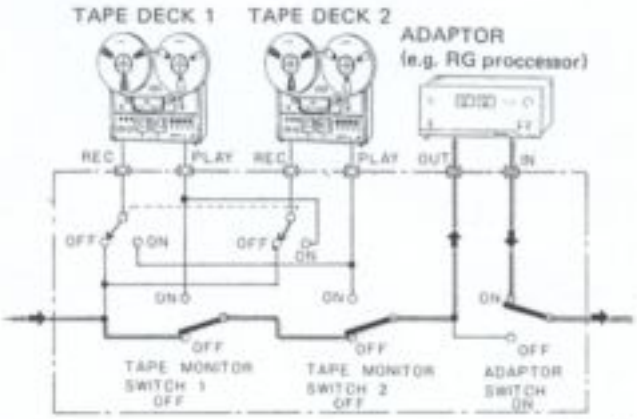

Fig. 19

SETTING UP A 4-CHANNEL SYSTEM

As shown in Fig. 20, a 4-channel system consists of two pairs of speakers, one at the front and the other at the rear, which gives a whole new dimension of realism not attainable with conventional 2-channel stereo. It gives a truer impression of the acoustics of the hall where the recording was made, including the atmosphere and applause.
The unique sense of "presence" of being "actually there" which 4-channel stereo alone can give, has to be experienced before it can be appreciated, and this receiver is ideally suited to form the heart of a 4-channel system, when connected to four speaker systems and a 4-channel decoder/power amplifier ("decoder-amp" below) for the rear channels.

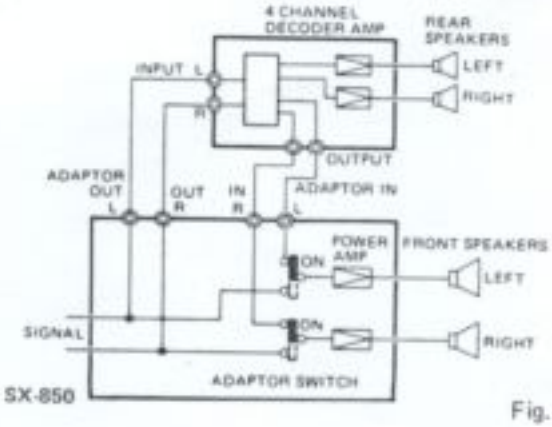

Fig. 20

Operation

1. Connect the receiver ADAPTOR OUT jacks to the decoder-amp INPUT jacks.
2. Connect the receiver ADAPTOR IN jacks to the decoder-amp OUTPUT jacks.
3. Turn the ADAPTOR switch ON.
4. Switch on the auxiliary adaptor unit.
5. You are now ready to enjoy the thrill of 4-channel reproduction.

Receiving 4 channel FM broadcasts

If 4-channel multiplex discrete FM broadcasts are available, the addition of a 4-channel discrete FM broadcast adaptor ("adaptor" below) will enable full 4-channel reproduction of the broadcasts from your receiver.

1. The adaptor is connected to the FM DET. OUT jack of the receiver as shown in Fig. 21.
2. Connect the adaptor output to the receiver ADAPTOR IN jacks.
3. Turn the ADAPTOR switch ON.
4. Depress the FM button for FUNCTION selection.
5. Tune in to the 4-channel discrete FM broadcast.
6. Switch on the auxiliary adaptor unit.
7. Adjust the VOLUME, BASS, and TREBLE controls for the listening level and tone quality of your preference.

NOTE:
For detailed instructions on connections, etc., see the instruction manual supplied with the adaptor.

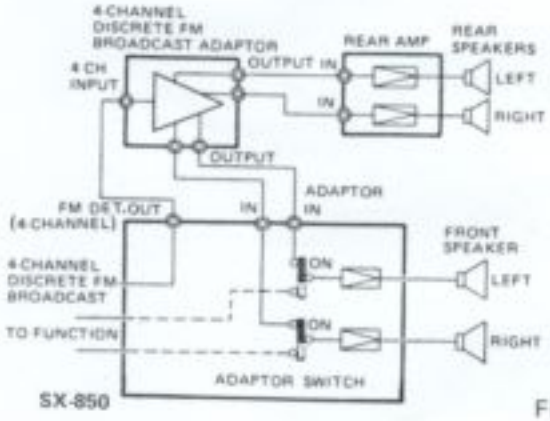

Fig. 21

Placement of Your Speaker Systems

As shown in Fig. 22, two pairs of speaker systems are located at the front left and right, and the rear left and right (four in all). Connect the speakers located in FRONT to the receiver, and the REAR speakers to the power amplifier for the rear channels.

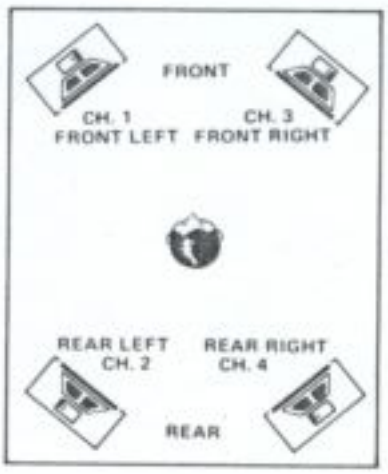

Fig. 22

EMPLOYING PRE OUT AND POWER IN JACKS

USING THE PRE OUT AND POWER IN JACKS

If the connections between the PRE OUT and POWER IN jacks shown in Fig. 23 are removed, the power amplifier and pre-amplifier section, it is possible to use it to drive a separate, high output power amplifier, or to build up a multi-amplifier system.

Fig. 23

INDEPENDENT PREAMPLIFIER FUNCTION

The preamplifier section of the SX-850 can be used independently to drive an external power amplifier. This allows comparison listening between the built-in SX-850 power amplifier and a homebuilt or other separate power amplifier.

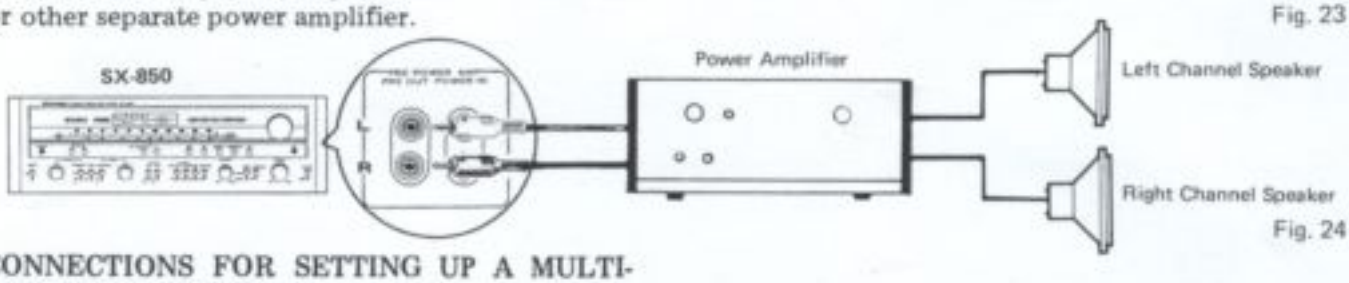

Fig. 24

CONNECTIONS FOR SETTING UP A MULTI-AMPLIFIER SYSTEM

By purchasing an electronic crossover network and one or two additional power amplifiers, a two- or three-way multi-amplifier system can be constructed. This splits up the audible frequency range into different frequency bands, to operate amplifiers and speakers ideally suited to each band. The result are reduced intermodulation distortion and improved damping and crossover characteristics. Use of the multi-amplifier system is as follows:

1. Remove both of the plugs bridging the PRE OUT and POWER IN jacks.
2. Connect the PRE OUT jacks to the input jacks of the crossover network.
3. Connect the POWER IN jacks to the LOW range jacks of the crossover network.
4. Connect the HIGH range output jacks of the crossover network to the input jacks of a separate power amplifier for the high frequency range.
5. Connect the speakers for the lower frequencies to the receiver, and those for the higher frequencies to the separate amplifier.

The levels of the different frequency ranges are adjustable by the crossover network. For detailed instructions on the use of the crossover network, please refer to the instruction manual provided with it.

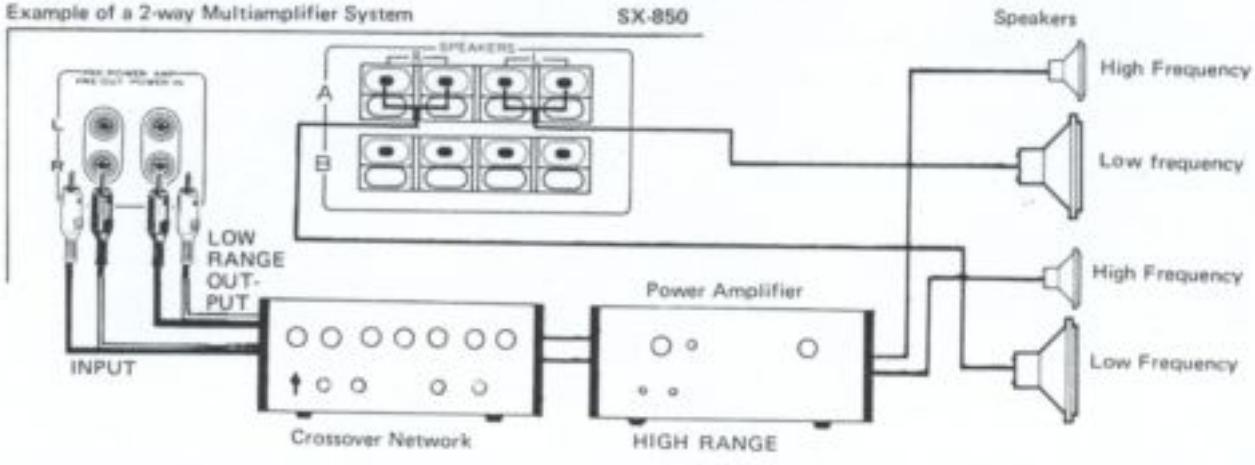

Fig. 25

CONDITIONS FREQUENTLY MISTAKEN FOR MALFUNCTION

If your stereo appears to malfunction, first check such things as the controls (power switch, function selector, tape monitor, etc.) and connecting cords (components connected correctly).

Noise: There are a variety of noises relating to the operation of a hi-fi unit. These are generally divided into two types; (1) the unit is faulty (a transistor or part has deteriorated) and (2) an external source is adding to the unit.

When a hi-fi unit porduces an unpleasant noise, it is often assumed that the unit is faulty, but statistical records indicate that the majority of noises produced in hi-fi acoustic units result from external sources of noise: Due to the inherent high sensitivity and the high fidelity in reproduction, the unit amplifies and reproduces extraneous noises, however small, into definite output noise. If your receiver produces a noise, check according to the following table and trace out the source of noise for the appropriate corrective action.

	SYMPTOM	SUSPECTED SOURCE OF NOISE	DIAGNOSIS AND REMEDY
WHEN LISTENING TO BROADCASTS	Continuous or intermittent noise like jjjjjj or zzzzzz.	• Static (lightning) • Fluorescent lamp, motor, or thermostat may be in use in house or in the vicinity of the house.	In many cases, it is very difficult to remove the source of noise. In order to make the radio input larger than the noise level, set up a good outdoor antenna and make a complete grounding.
	When a station is tuned in, hum is mixed in the program.	• Poor fluorescent lamp, motor, or electric heater may be in use in house or near the house.	Reversing the line plug may occasionally alleviate this noise problem. Usually it is very difficult to eliminate the noise.
	Hissing sound noise in AM (medium wave) reception.	• The frequency of an adjacent station is interfering with that of the station being tuned in (10kHz beat interference). • TV set is on in the same house with the receiver.	Impossible to remove such interference. If the cause of such noise is the TV set, increase the distance between the TV set and receiver.
	Static noise (in particular, when automobiles run close to the house).	• White noise generated from automobile engines. • High frequency sewing machine or welding machine being used near your house.	In an area surrounded by hills or high buildings, the FM input signals are very weak. Thus the noise limiter in the circuit loses its function. Set up an FM outdoor antenna having many director elements.
	Reception of FM stereo program contains more noise than FM mono program.	• Note that the service area covered by an FM stereo broadcast is about 50% of that of a regular mono broadcast.	Increasing the FM input signal may alleviate this problem. Use an FM outdoor antenna instead of the indoor T-type antenna.
WHEN PLAYING RECORDS	Hum or buzz. When switched to radio reception, the noise disappears.	• Poor connection of shielded wire.(a) • Jack connection is loose.(b) • Line cord of fluorescent lamp is near the shielded wire.(c) • Poor grounding.(d) • Ham transmitting station or TV transmitting station is near your house.(e)	Correct the conditions stated in (a), (b), (c) or (d). In case of (e), report it to an official activity.
	Output tone quality is poor and mixed with noise. Treble is not clear.	• Stylus is worn.(a) • Record is worn.(b) • Dust adhering to stylus.(c) • Stylus is improperly mounted. (d) • Stylus pressure is not correct.(e) • The TREBLE level is too high.	Check (a) through (e) and correct the condition. Lower the TREBLE level.
	In playing a record, increasing the volume causes howling.	• Distance between the turntable and the speakers is too short. • The turntable or speakers supports are unstable.	Increase the distance or rearrange the installation of the unit and speakers. (Installing the turntable on a firm, solid stand may alleviate this problem.) Do not enhance the BASS sound level excessively.
WHEN USING MICROPHONE	Howling occurs.	• Feed back between microphone and speakers.	• Keep microphone away from speakers. • Do not set the VOLUME control too high. • Set BASS and TREBLE controls to center positions.

4. BLOCK DIAGRAM

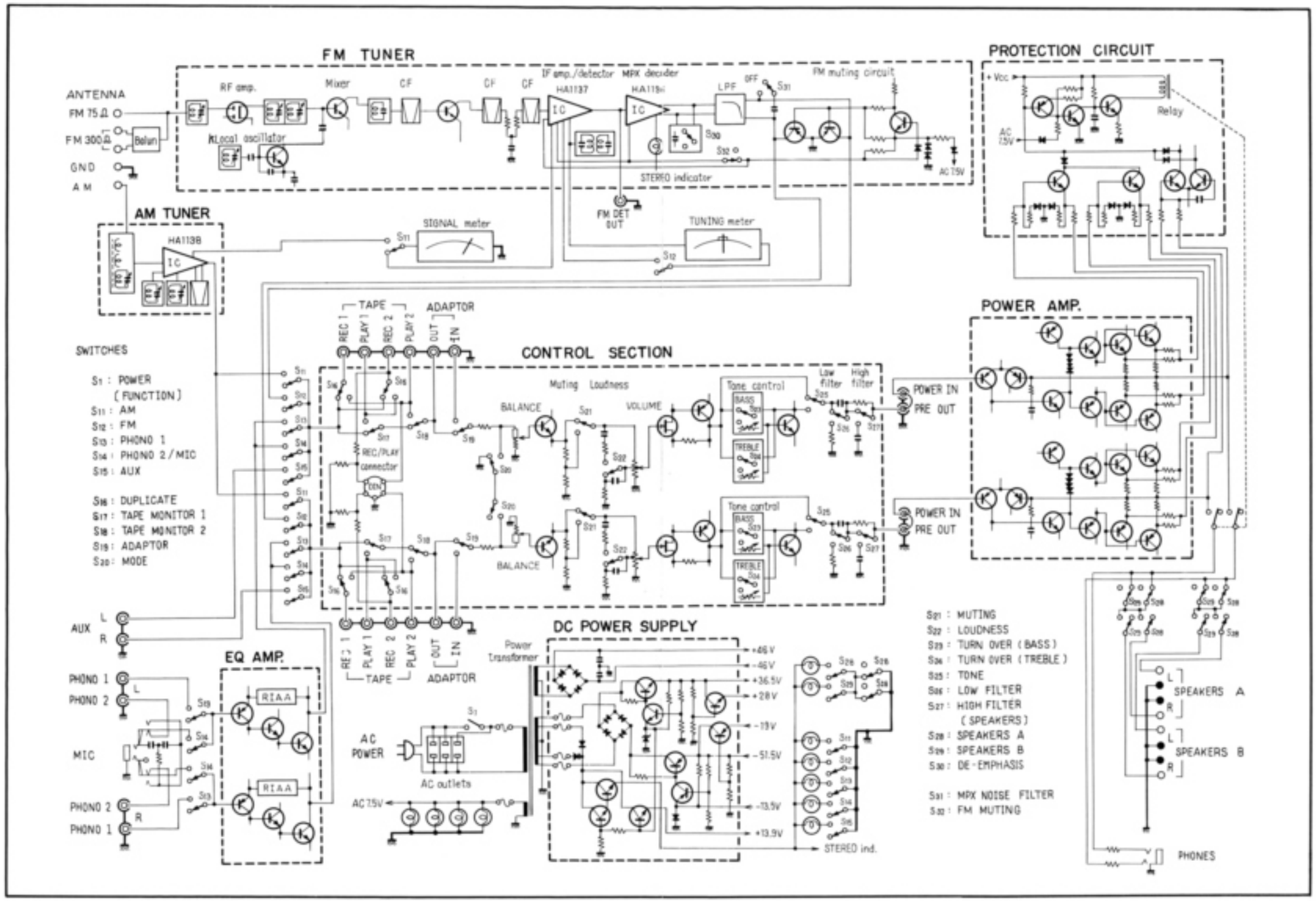

7. DISASSEMBLY

Removing the Wooden Cover

Remove the two screws (A) on each side of the wooden cover.

Removing the Bottom Plate

Remove the eleven screws (B) to detach the bottom plate.

Removing the Front Panel

1. Loosen the setscrew of TUNING knob with a hexagonal wrench.
2. Remove all the knob by pulling.
3. Remove the two screws (C) from the top edge of the front panel.
4. Remove the three nuts (D) from the tone and volume control shafts.

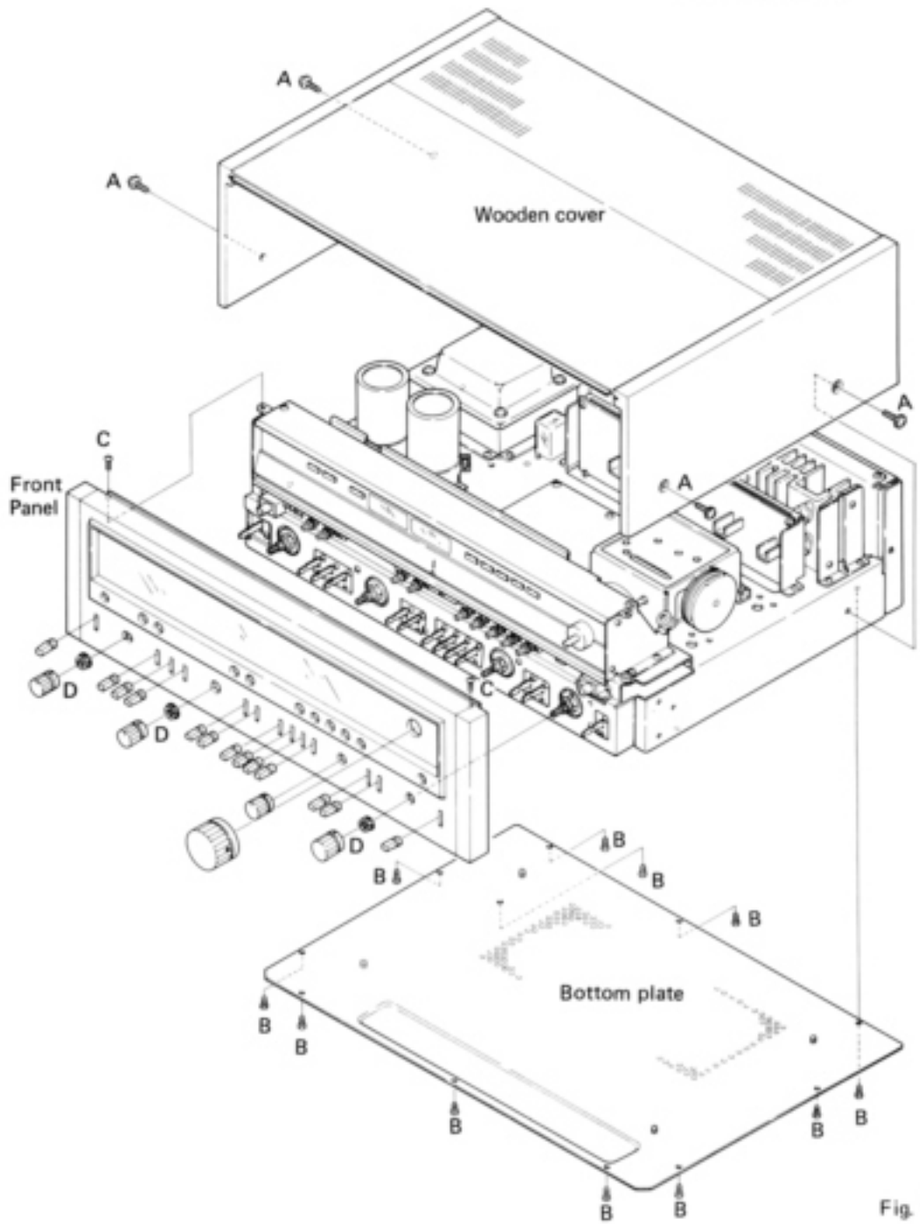

Fig. 17

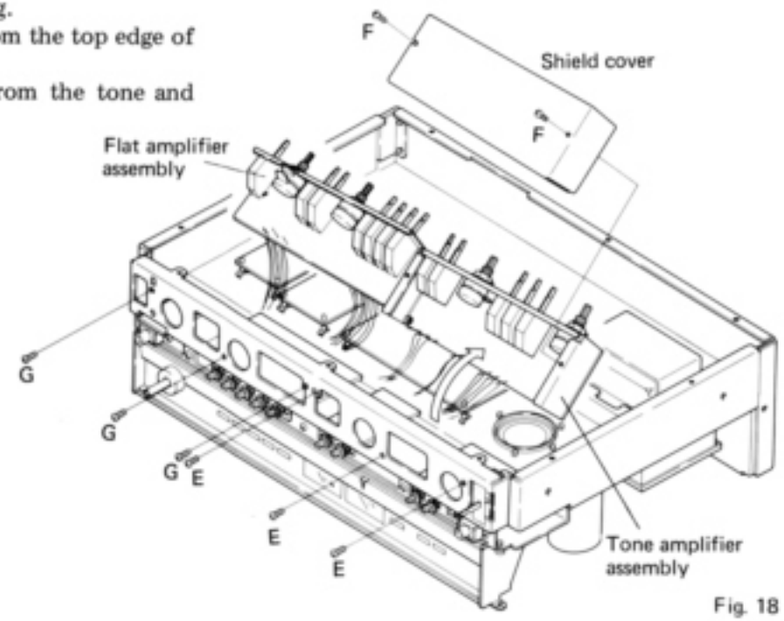

Fig. 18

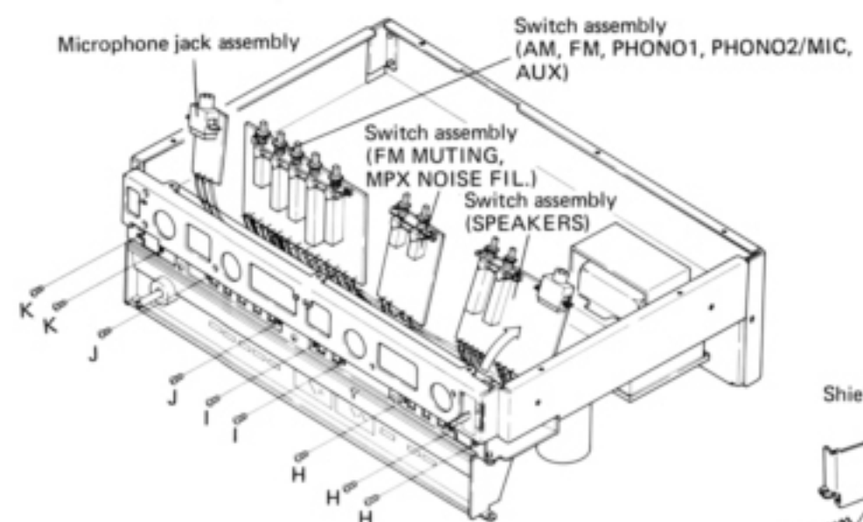

Fig. 19

Removing the Tone Amplifier Assembly

1. Unscrew the three screws (E) of the chassis. Remove the tone amplifier assembly.
2. Remove the two screws (F) to detach the shield cover. After this has been done tone amplifier can be checked.

Removing the Flat Amplifier Assembly

1. Unscrew the three screws (G) of the chassis.
2. Remove the flat amplifier assembly. After this has been done flat amplifier can be checked.

Removing the Switch Assembly (SPEAKERS)

Unscrew the three screws (H) of the chassis.

Removing the Switch Assembly (FM MUTING, MPX NOISE FILTER)

Unscrew the two screws (I) of the chassis.

Removing the Switch Assembly (AM, FM, PHONO 1, PHONO 2/MIC, AUX)

Unscrew the two screws (J) of the chassis.

Removing the Microphone Jack Assembly

Unscrew the two screws (K) of the chassis.

Removing the Power Amplifier Assembly

1. Unscrew the six screws (L) which mount the heat sink and the shield plate on the chassis.
2. Unscrew the three screws (M) at the upper part of the power amplifier assembly.
3. This allows the heat sink to be turned forward. Remove the shield plate.
4. After this has been done the power amplifier can be checked.

NOTE:
Before turning the power on, take particular care that the heat sink and power amplifier assembly are not contacting any other parts of amplifier.

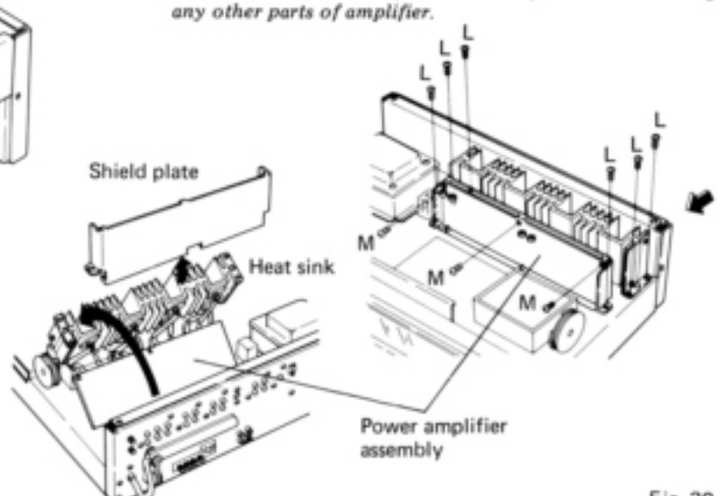

Fig. 20

8. PART LOCATIONS

8.1 FRONT PANEL VIEW

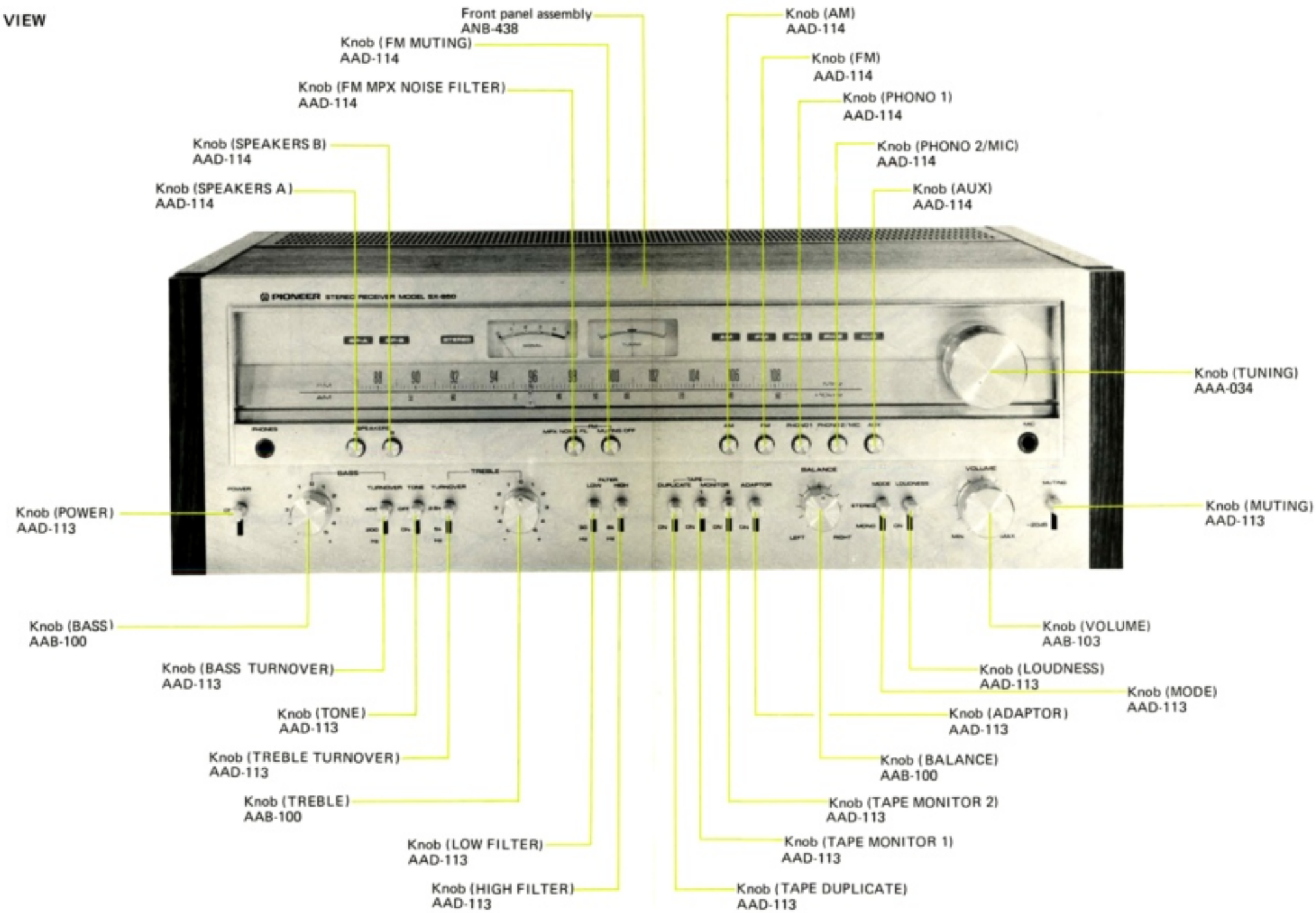

8.2 FRONT VIEW WITH PANEL REMOVED

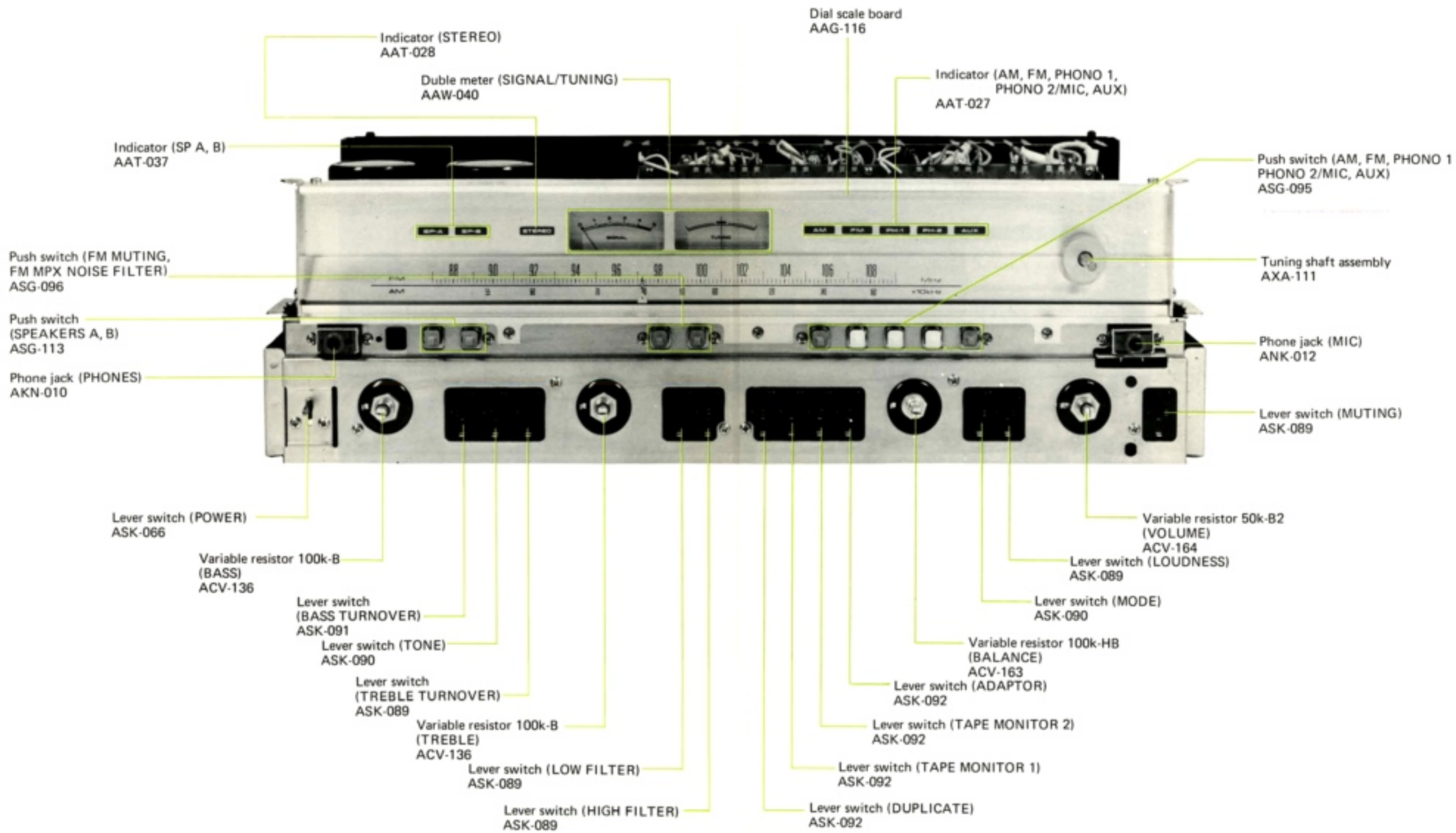

8.3 TOP VIEW

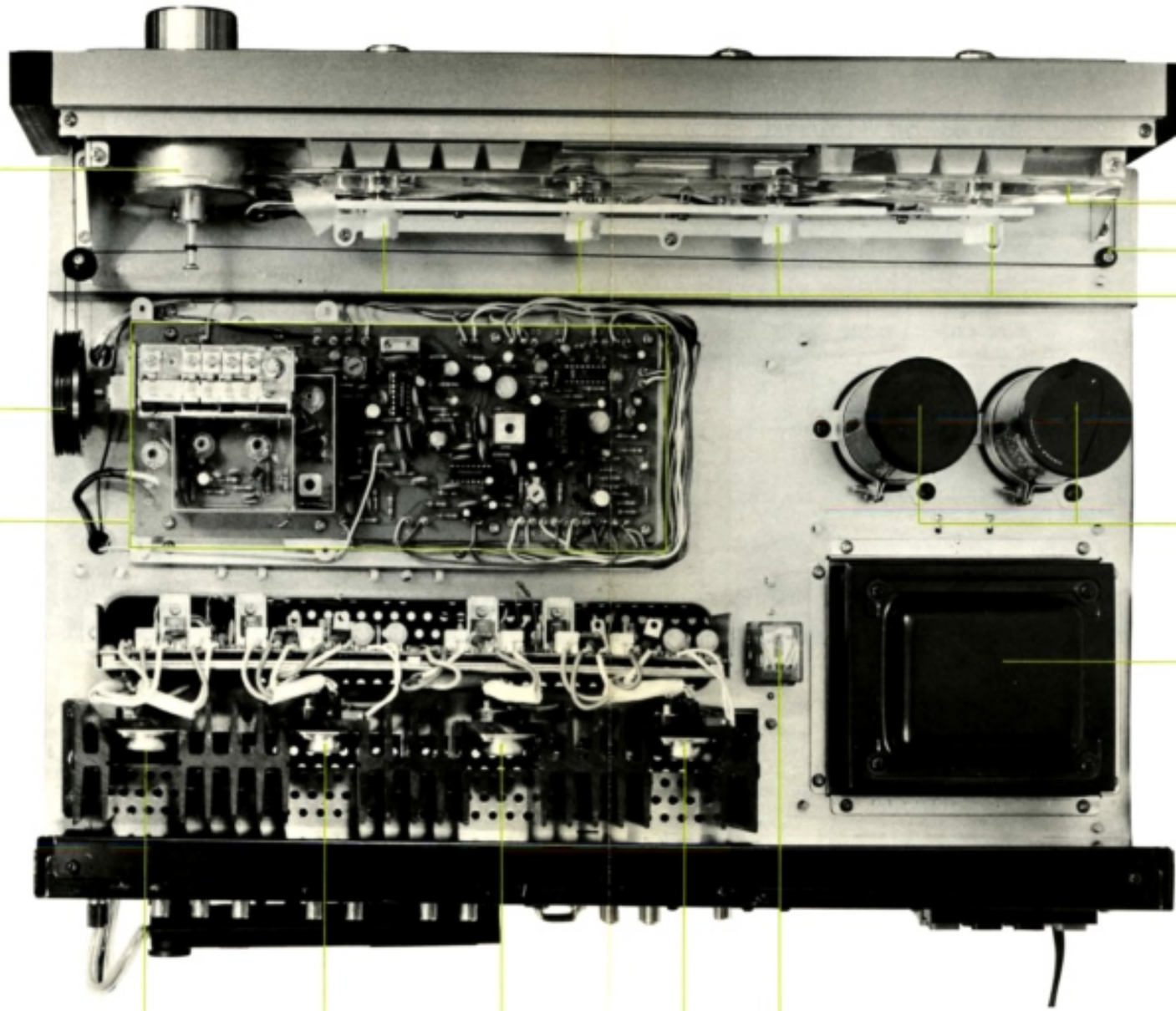
Tuning shaft assembly
AXA-111
Tuning drum assembly
AXA-113
Tuner assembly
AWE-071
Lamp board assembly
AWX-096
Pulley (small)
AEC-256
Lamp assembly (PL1–4)
Lamp (8V 0.3A, wedge-type)
AEL-029
Lamp socket (wedge-type)
AKK-004
Electrolytic capacitor
(15,000 F, 50V)
ACH-068
Power transformer
ATT-302
Transistor
2SB531A-R
Transistor
2SD371A-R
Transistor
2SB531A-R
Relay (S2)
ASR-019
Transistor
2SD371A-R

8.4 BOTTOM VIEW

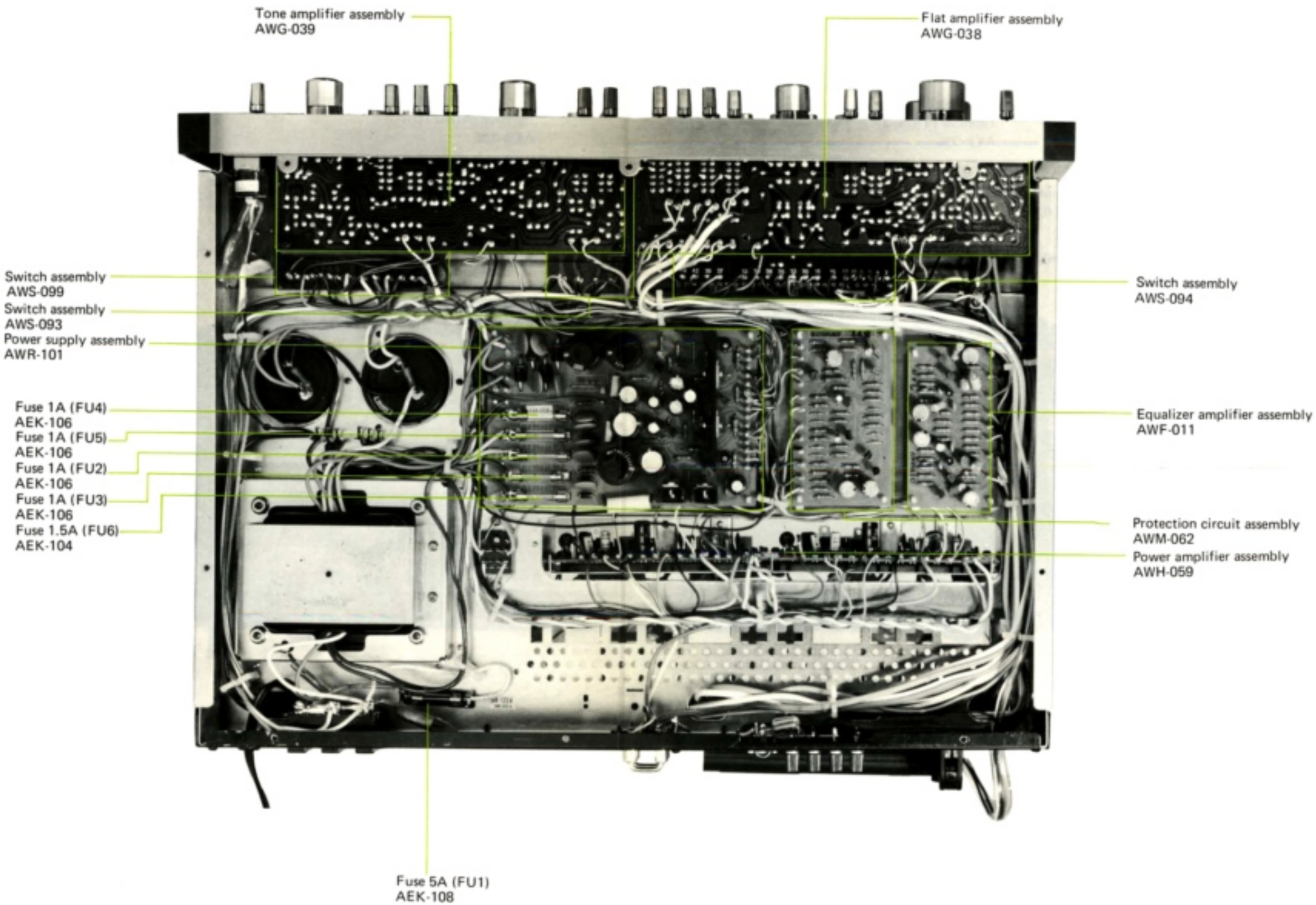

8.5 REAR PANEL VIEW

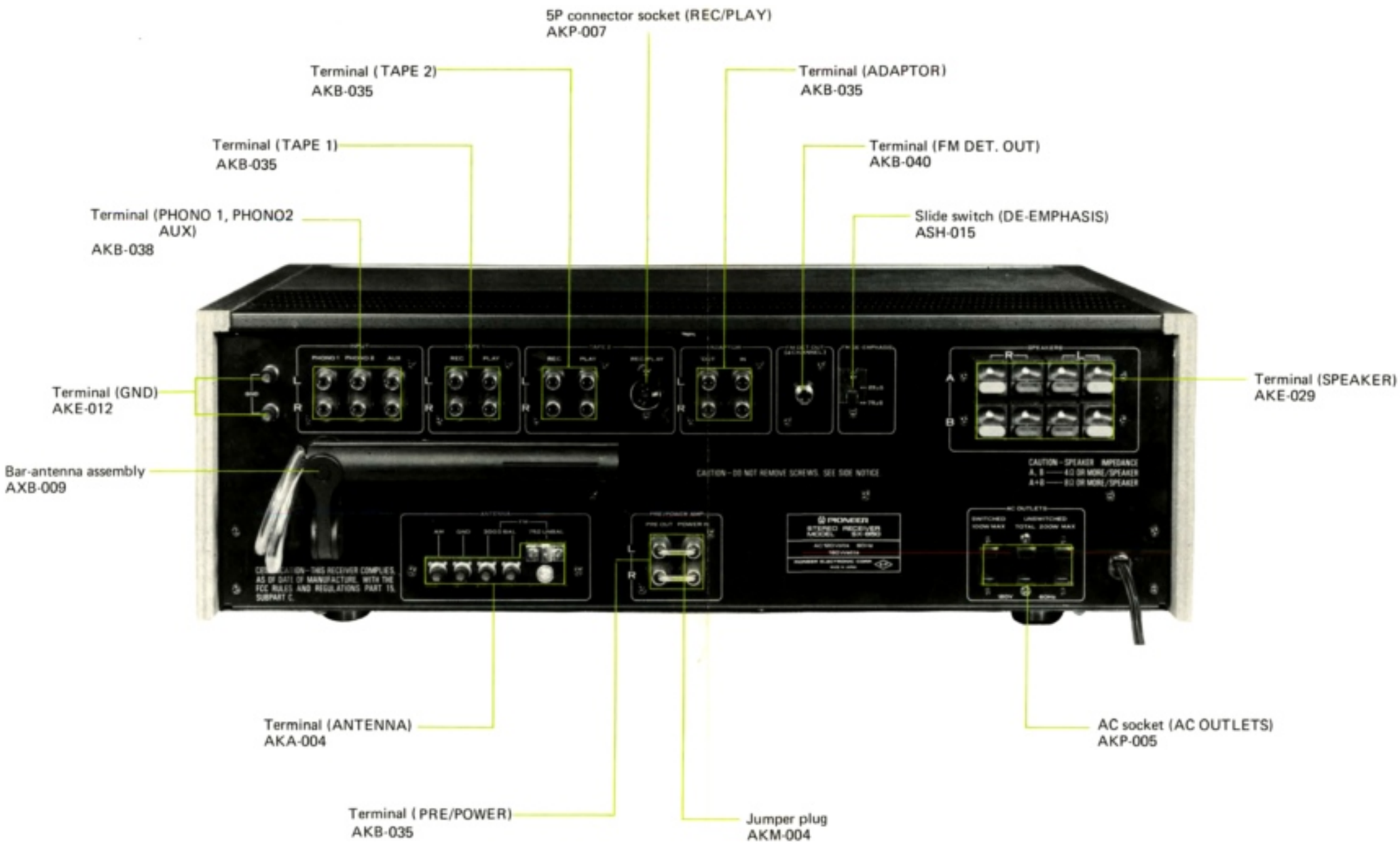

NOTE:
Part indicated in green type cannot be supplied.

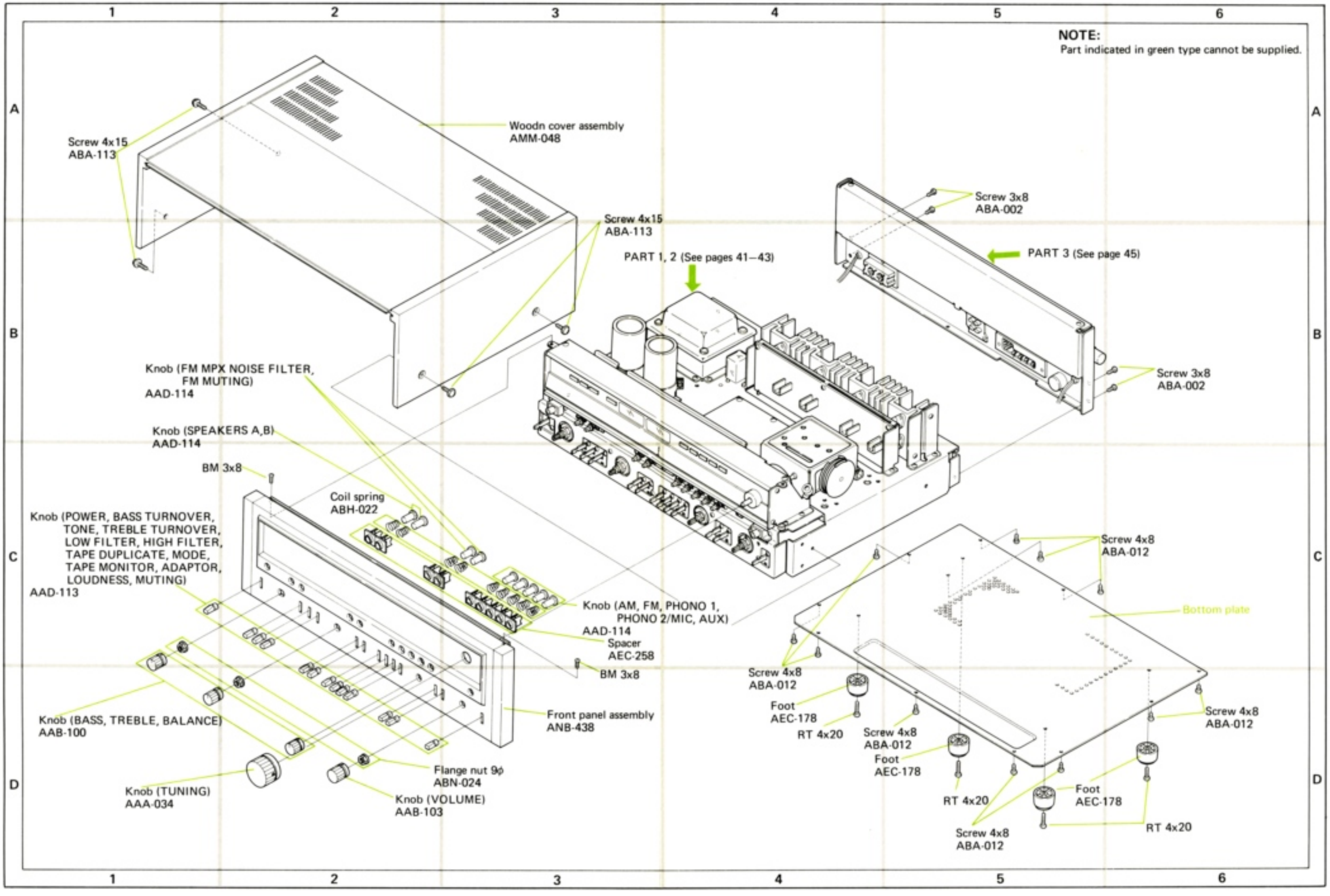

Part 1

NOTE:
Parts indicated in green type cannot be supplied.

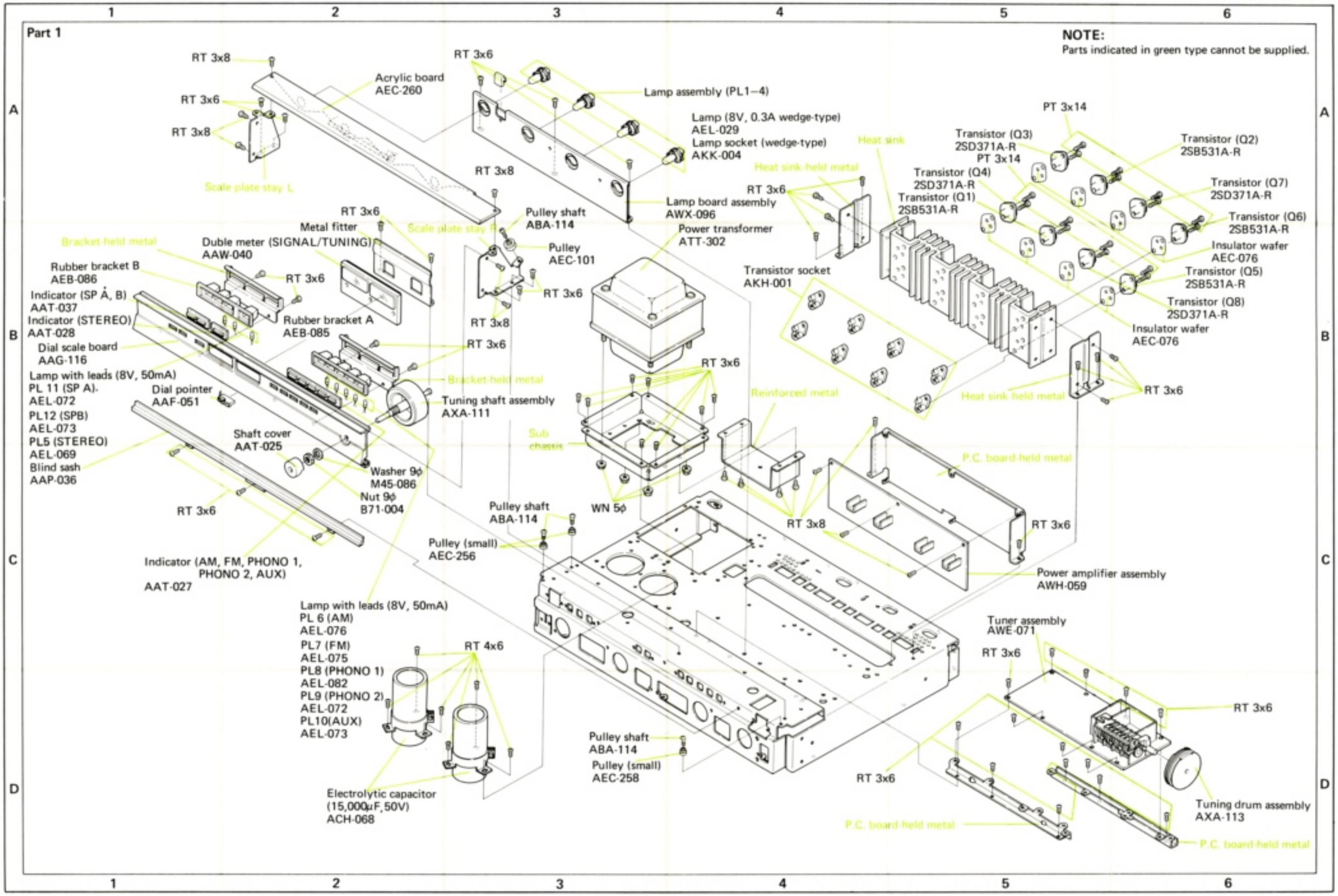

12. SCHEMATIC DIAGRAMS, P.C. BOARD PATTERNS AND PARTS LISTS

12.1 SCHEMATIC DIAGRAM AND MISCELLANEOUS PARTS

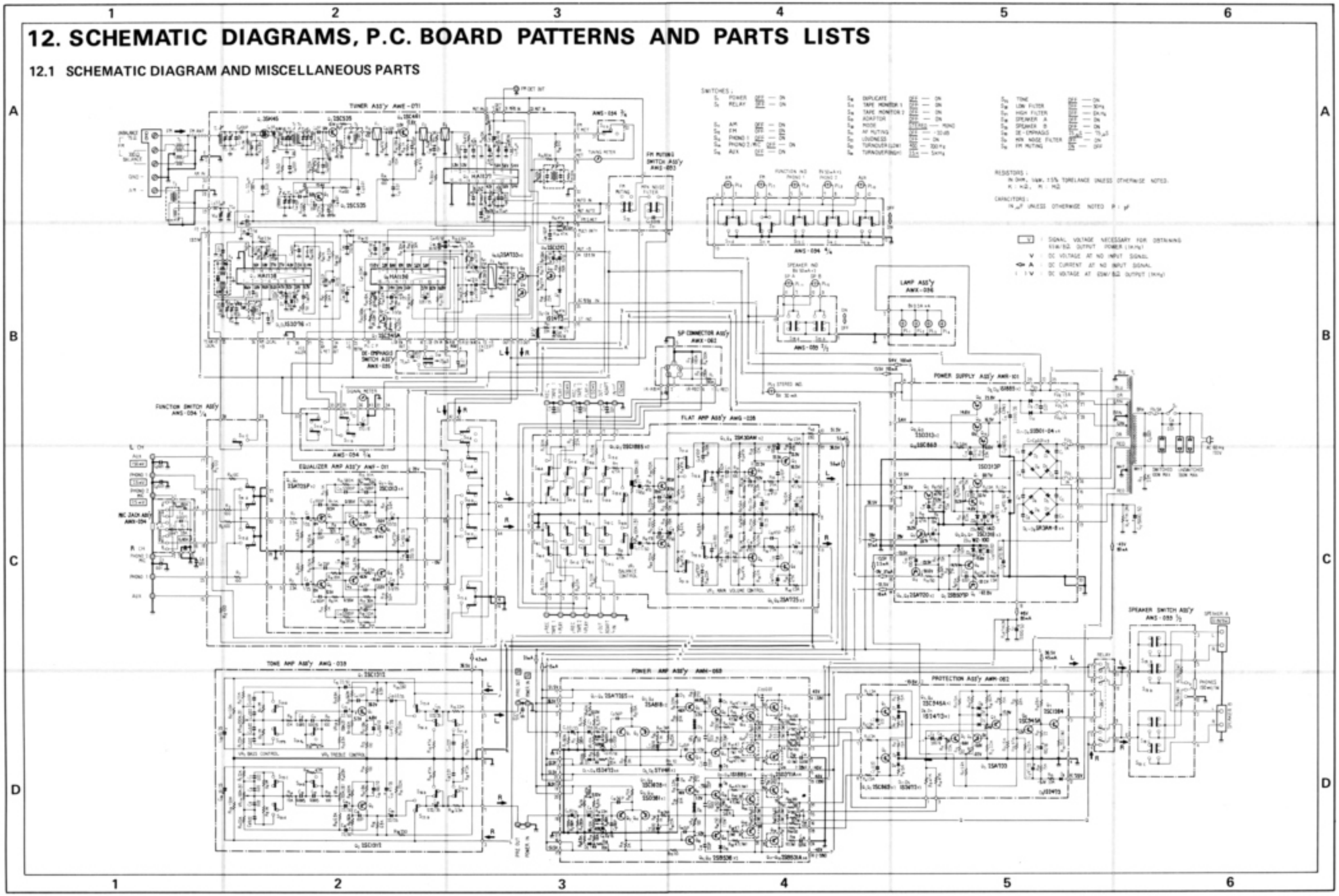

Miscellaneous Parts

NOTE:
- *Capacitors: in μF unless otherwise noted p:pF*
- *Resistors: in Ω, ¼W unless otherwise noted k:kΩ, M:MΩ*

SEMICONDUCTORS

Symbol	Description	Part No.
Q1	Transistor	2SB531A-R
Q2	Transistor	2SB531A-R
Q3	Transistor	2SD371A-R
Q4	Transistor	2SD371A-R
Q5	Transistor	2SB531A-R
Q6	Transistor	2SB531A-R
Q7	Transistor	2SD371A-R
Q8	Transistor	2SD371A-R

LAMPS

Symbol	Description	Part No.
PL1	Lamp assembly*	
PL2	Lamp assembly*	
PL3	Lamp assembly*	
PL4	Lamp assembly*	
	*Lamp assemblies (PL1–PL4) are made up of following parts.	
	(1) Lamp (8V, 0.3A, wedge-type)	AEL-029
	(2) Lamp socket (wedge-type)	AKK-004
PL5	Lamp with leads (8V, 50mA)	AEL-069
PL6	Lamp with leads (8V, 50mA)	AEL-076
PL7	Lamp with leads (8V, 50mA)	AEL-075
PL8	Lamp with leads (8V, 50mA)	AEL-082
PL9	Lamp with leads (8V, 50mA)	AEL-072
PL10	Lamp with leads (8V, 50mA)	AEL-073
PL11	Lamp with leads (8V, 50mA)	AEL-072
PL12	Lamp with leads (8V, 50mA)	AEL-073

FUSES

Symbol	Description	Part No.
FU1	Fuse 5A (primary)	AEK-108
FU2	Fuse 1A (secondary)	AEK-106
FU3	Fuse 1A (secondary)	AEK-106
FU4	Fuse 1A (secondary)	AEK-106
FU5	Fuse 1A (secondary)	AEK-106
FU6	Fuse 1.5A (lamp circuit)	AEK-104

SWITCHES

Symbol	Description	Part No.
S1	Lever switch (POWER)	ASK-066
S2	Relay	ASR-019

TRANSFORMERS AND COIL

Symbol	Description	Part No.
T1	Power transformer	ATT-302
T2	Ferrite balun	T22-025
T3	Bar-antenna assembly	AXB-009

RESISTORS

Symbol	Description			Part No.
R1	Metal oxide	4.7k	2W	RS2P 472J
R2	Metal oxide	4.7k	2W	RS2P 472J
R3	Carbon film	2.2M	½W	RD½PS 225J

CAPACITORS

Symbol	Description			Part No.
C1	Electrolytic	15,000	50V	ACH-068
C2	Electrolytic	15,000	50V	ACH-068
C3	Ceramic	0.01	150V(DC1.4kV)	ACG-003
C4	Ceramic	0.01	150V(DC1.4kV)	ACG-003
C5	Ceramic	0.01	50V	CKDYF 103Z 50
C6	Ceramic	0.01	50V	CKDYF 103Z 50
C7	Ceramic	0.01	50V	CKDYF 103Z 50
C8	Ceramic	0.01	50V	CKDYF 103Z 50
C9	Ceramic	0.01	50V	CKDYF 103Z 50
C10	Ceramic	0.01	50V	CKDYF 103Z 50
C11	Ceramic	0.01	50V	CKDYF 103Z 50
C12	Ceramic	0.01	50V	CKDYF 103Z 50

OTHERS

Symbol	Description	Part No.
	AC socket (AC OUTLETS)	AKP-005
	AC power cord	ADG-005

Equivalent Circuit Diagrams of ICs

HA1137 (FM IF IC)

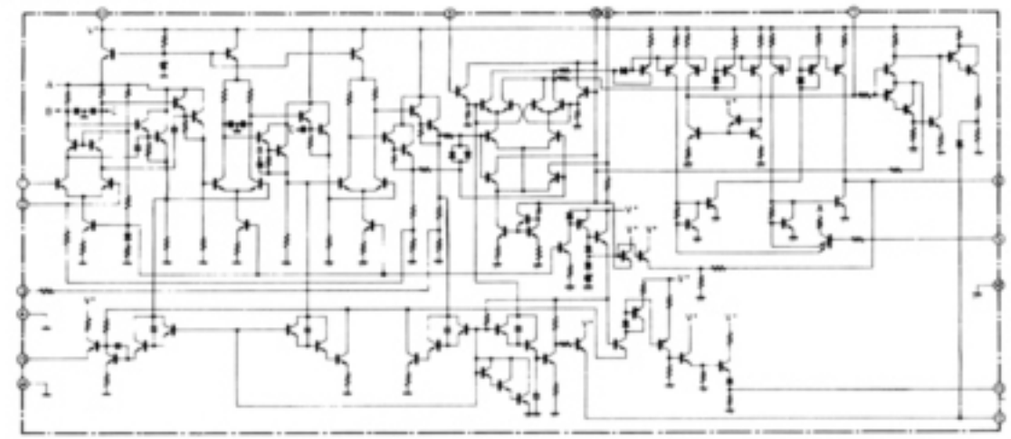

HA1138 (AM IC)

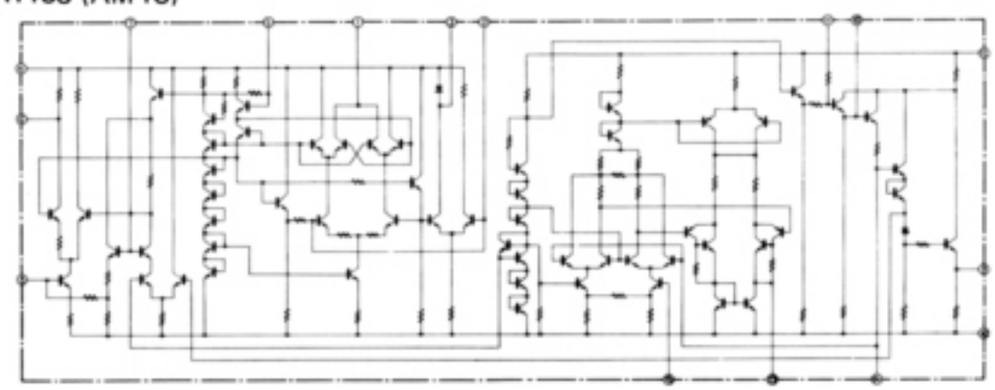

12.2 TUNER ASSEMBLY (AWE-071)

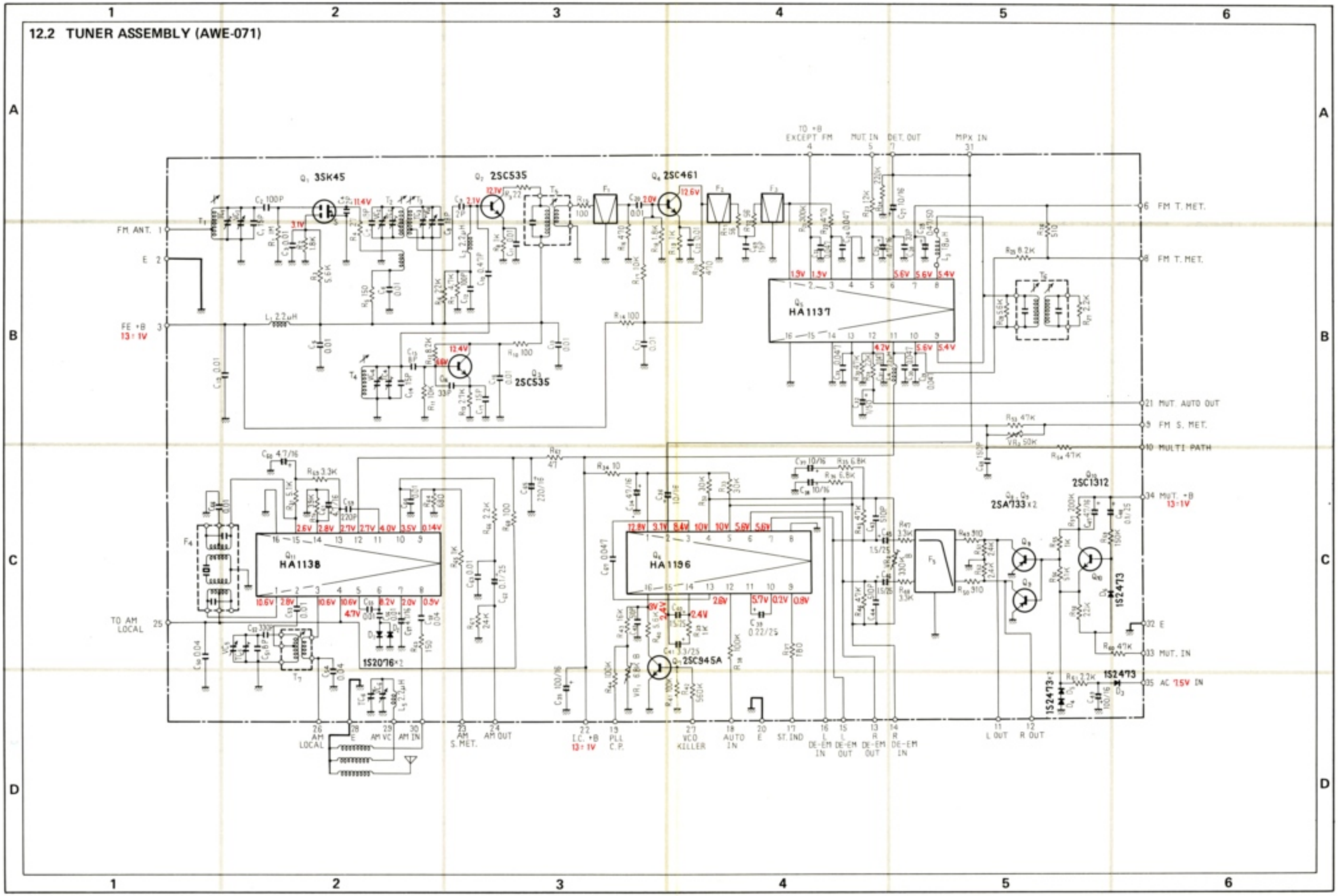

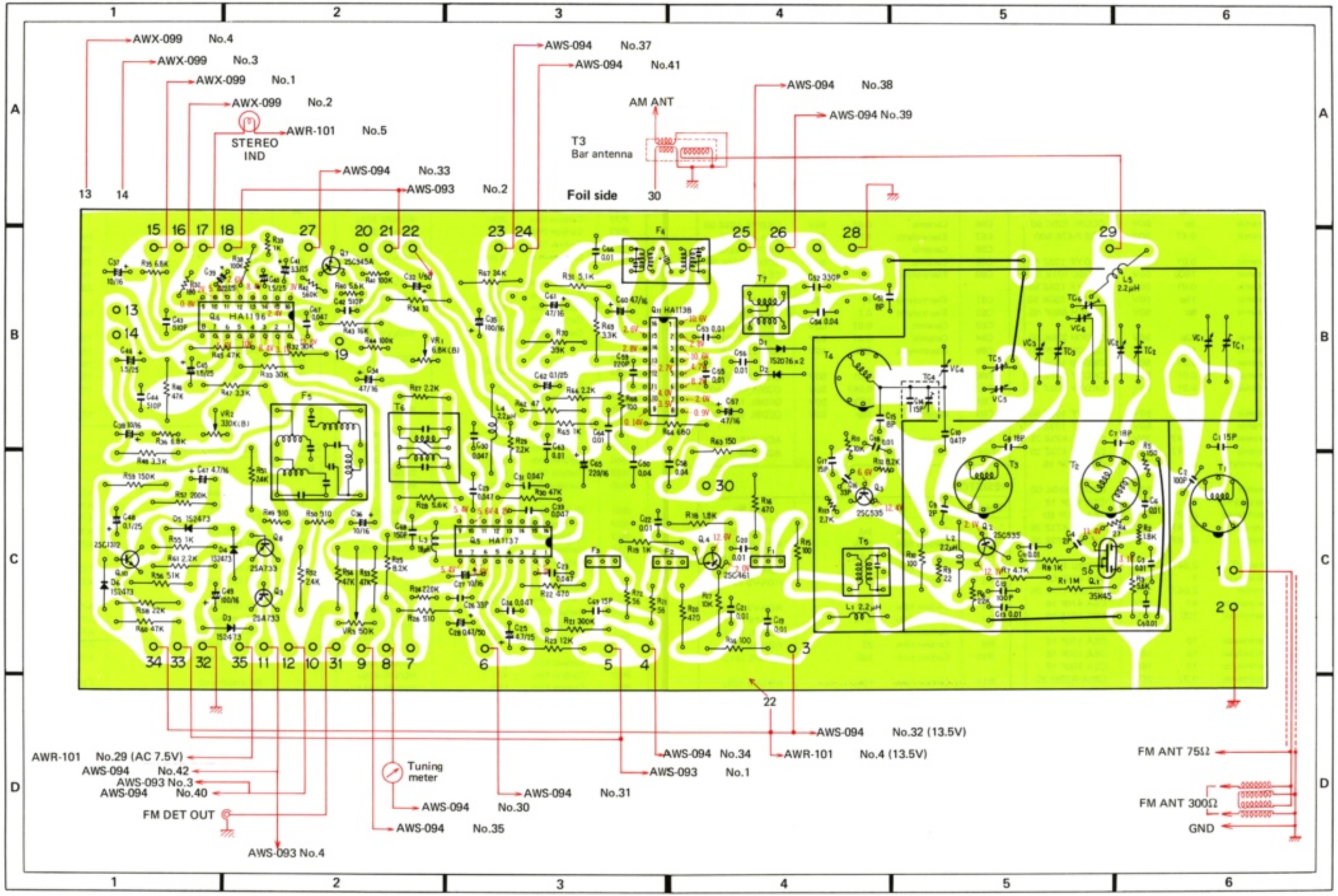
AWX-099 No.4
AWX-099 No.3
AWX-099 No.1
AWX-099 No.2
AWR-101 No.5
STEREO IND
AWS-094 No.33
AWS-093 No.2
AWS-094 No.37
AWS-094 No.41
AM ANT
T3 Bar antenna
Foil side
AWS-094 No.38
AWS-094 No.39
AWS-094 No.32 (13.5V)
AWS-094 No.34
AWR-101 No.4 (13.5V)
AWS-093 No.1
AWR-101 No.29 (AC 7.5V)
AWS-094 No.42
AWS-093 No.3
AWS-094 No.40
FM DET OUT
Tuning meter
AWS-094 No.30
AWS-094 No.31
AWS-094 No.35
AWS-093 No.4
FM ANT 75Ω
FM ANT 300Ω
GND

Foil side

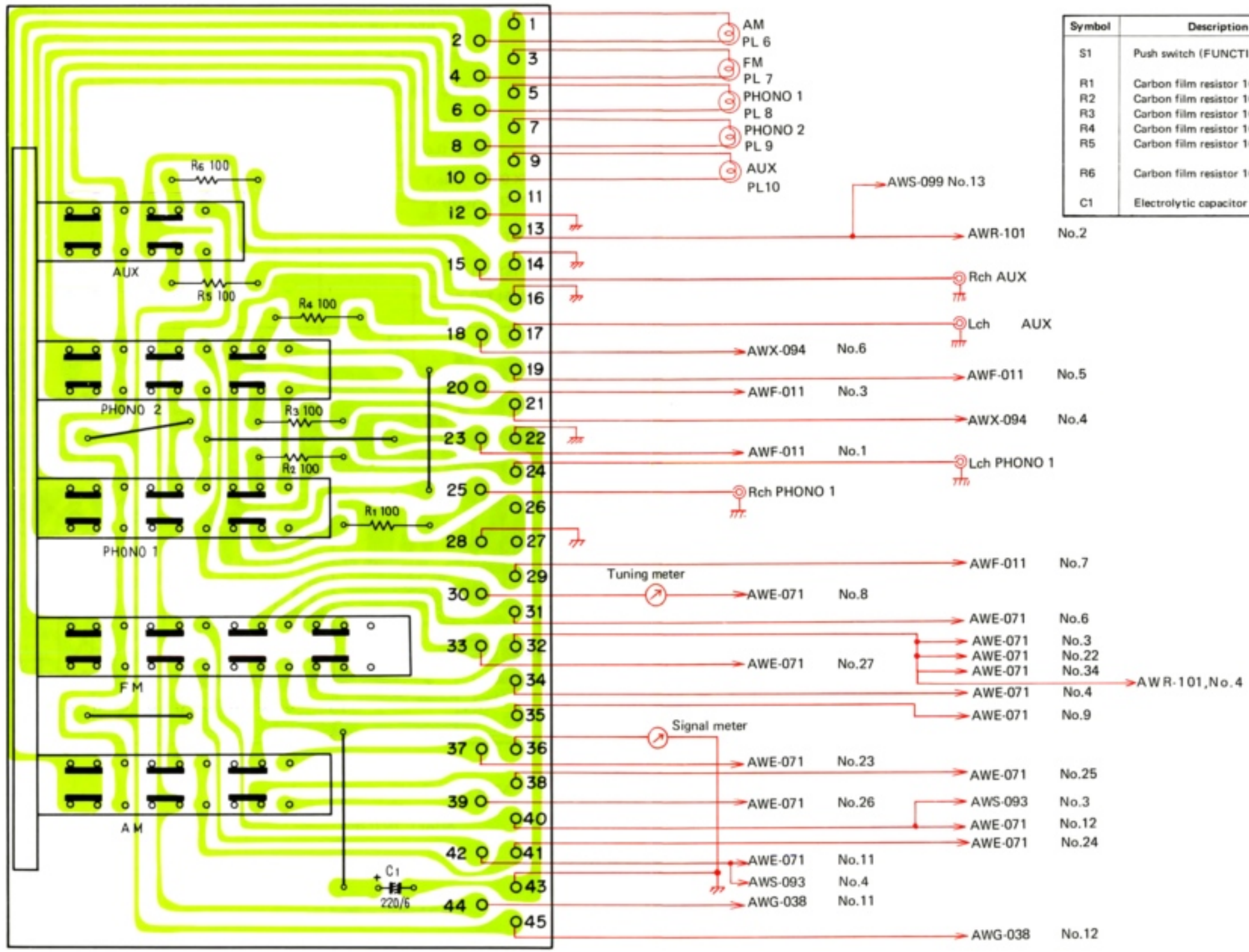

Parts List of Switch Assembly (AWS-094)

Symbol	Description	Part No.
S1	Push switch (FUNCTION)	ASG-095
R1	Carbon film resistor 100	RD¼PS 101J
R2	Carbon film resistor 100	RD¼PS 101J
R3	Carbon film resistor 100	RD¼PS 101J
R4	Carbon film resistor 100	RD¼PS 101J
R5	Carbon film resistor 100	RD¼PS 101J
R6	Carbon film resistor 100	RD¼PS 101J
C1	Electrolytic capacitor 220 6V	CEA 221P 6

12.7 FLAT AMPLIFIER ASSEMBLY (AWG-038)

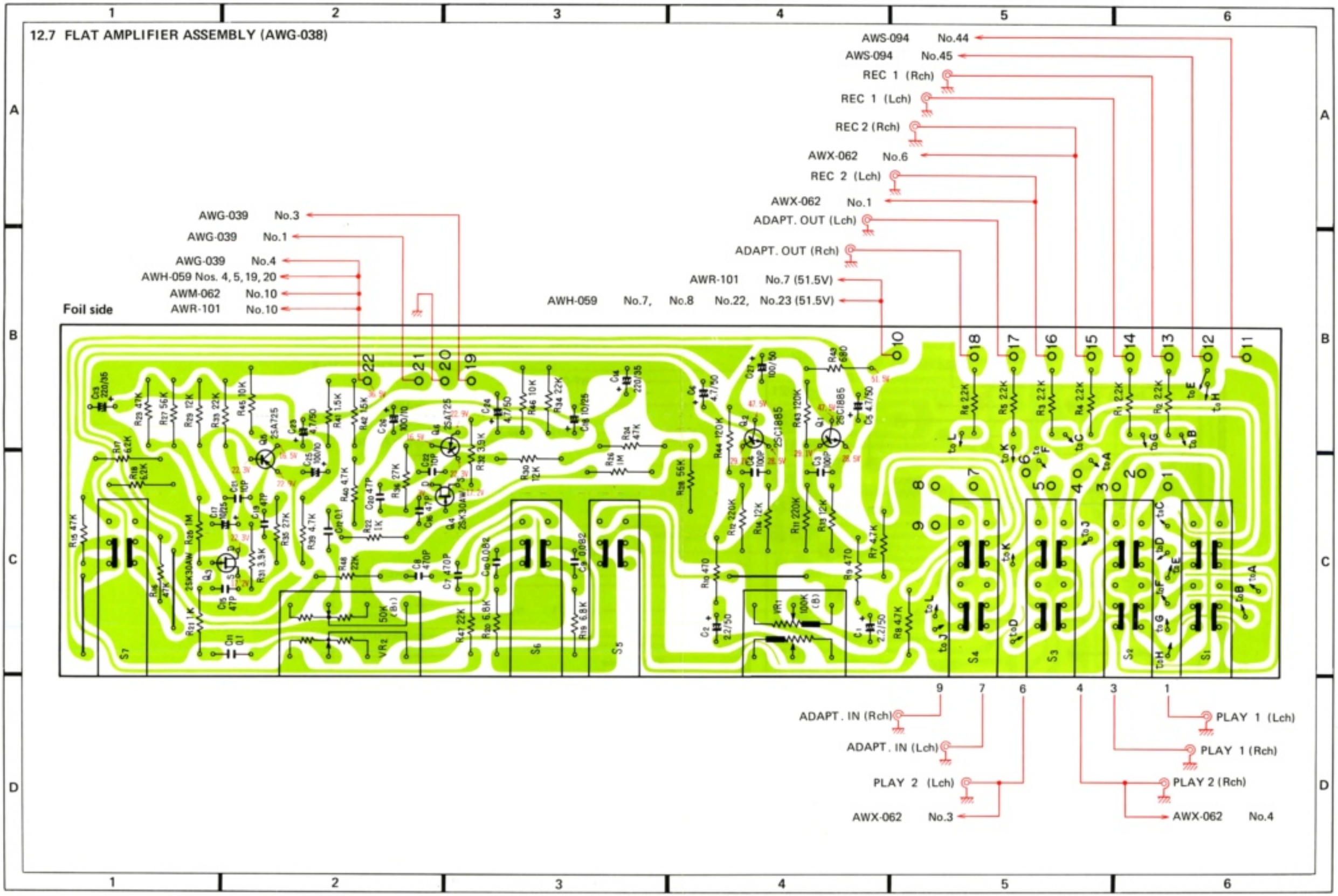

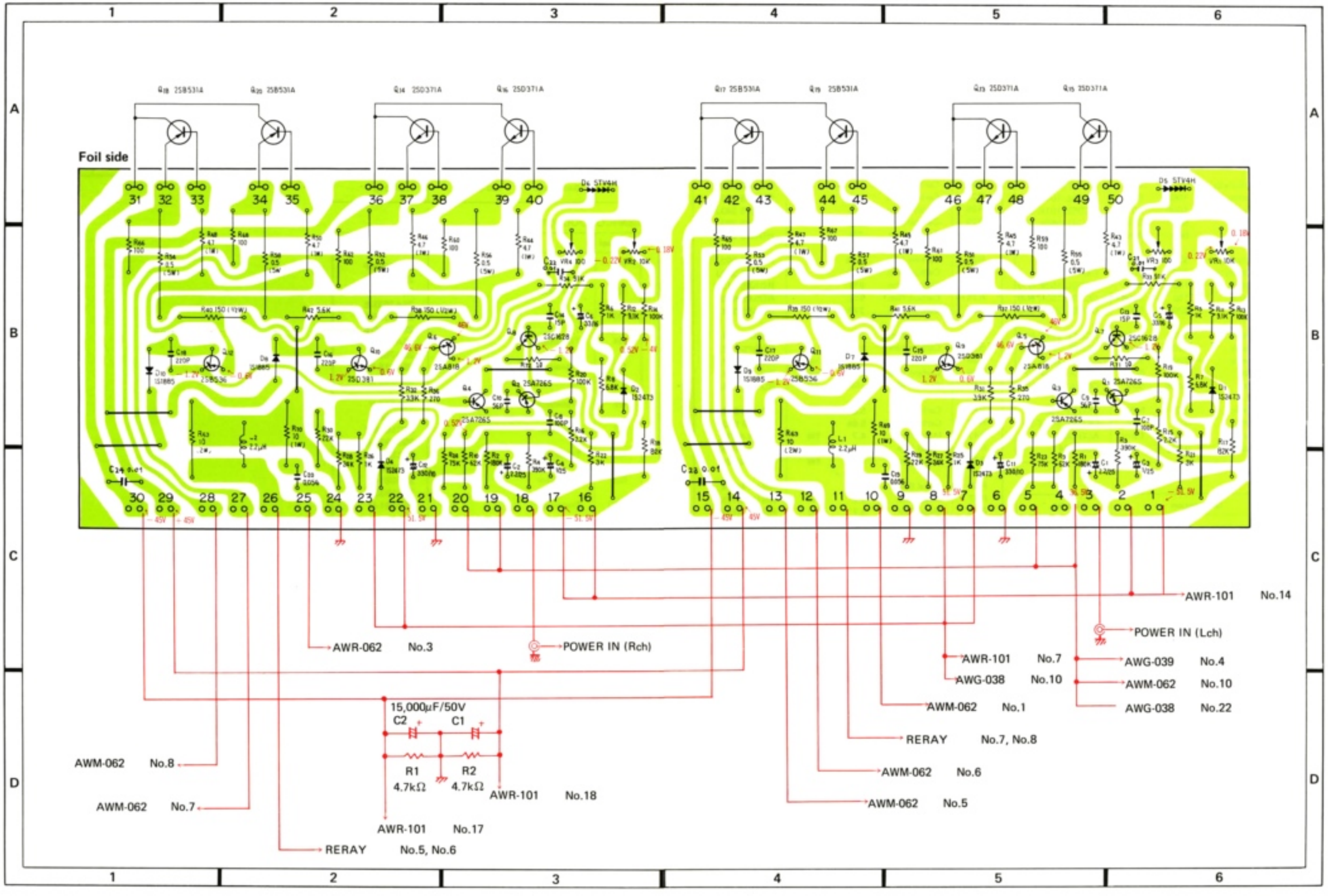
Foil side
AWR-101 No.14
POWER IN (Lch)
AWR-062 No.3
POWER IN (Rch)
AWR-101 No.7
AWG-038 No.10
AWG-039 No.4
AWM-062 No.10
AWM-062 No.1
AWG-038 No.22
RERAY No.7, No.8
AWM-062 No.6
AWM-062 No.5
15,000μF/50V
C2
C1
R1
4.7kΩ
R2
4.7kΩ
AWR-101 No.18
AWM-062 No.8
AWM-062 No.7
AWR-101 No.17
RERAY No.5, No.6

Parts List of Power Amplifier Assembly (AWH-059)

CAPACITORS

Symbol	Description			Part No.
C1	Electrolytic	2.2	25V	CSSA 2R2M 25
C2	Electrolytic	2.2	25V	CSSA 2R2M 25
C3	Electrolytic	1	25V	CSSA 010M 25
C4	Electrolytic	1	25V	CSSA 010M 25
C5	Electrolytic	33	16V	CEA 330P 16
C6	Electrolytic	33	16V	CEA 330P 16
C7	Ceramic	100p	50V	CCDSL 101K 50
C8	Ceramic	100p	50V	CCDSL 101K 50
C9	Ceramic	56p	50V	CCDSL 560K 50
C10	Ceramic	56p	50V	CCDSL 560K 50
C11	Electrolytic	330	10V	CEA 331P 10
C12	Electrolytic	330	10V	CEA 331P 10
C13	Ceramic	15p	500V	CCDSL 150K 500
C14	Ceramic	15p	500V	CCDSL 150K 500
C15	Ceramic	220p	500V	CCDSL 221K 500
C16	Ceramic	220p	500V	CCDSL 221K 500
C17	Ceramic	220p	500V	CCDSL 221K 500
C18	Ceramic	220p	500V	CCDSL 221K 500
C19	Mylar	0.056	50V	CQMA 563M 50
C20	Mylar	0.056	50V	CQMA 563M 50
C21	Ceramic	0.01	50V	CKOYF 103Z 50
C22	Ceramic	0.01	50V	CKDYF 103Z 50
C23	Ceramic	0.01	150V	ACG-004
C24	Ceramic	0.01	150V	ACG-004

RESISTORS

Symbol	Description			Part No.
R1	Carbon film	180k		RD¼PS 184J
R2	Carbon film	180k		RD¼PS 184J
R3	Carbon film	390k		RD¼PS 394J
R4	Carbon film	390k		RD¼PS 394J
R5	Carbon film	1k		RD¼PS 102J
R6	Carbon film	1k		RD¼PS 102J
R7	Carbon film	6.8k		RD¼PS 682J
R8	Carbon film	6.8k		RD¼PS 682J
R9	Carbon film	62k		RD¼PS 623J
R10	Carbon film	62k		RD¼PS 623J
R11	Carbon film	9.1k		RD¼PS 912J
R12	Carbon film	9.1k		RD¼PS 912J
R13	Carbon film	100k		RD¼PS 104J
R14	Carbon film	100k		RD¼PS 104J
R15	Carbon film	2.2k		RD¼PS 222J
R16	Carbon film	2.2k		RD¼PS 222J
R17	Carbon film	82k		RD¼PS 823J
R18	Carbon film	82k		RD¼PS 823J
R19	Carbon film	100k		RD¼PS 104J
R20	Carbon film	100k		RD¼PS 104J
R21	Carbon film	3k		RD¼PS 302J
R22	Carbon film	3k		RD¼PS 302J
R23	Carbon film	75k		RD¼PS 753J
R24	Carbon film	75k		RD¼PS 753J
R25	Carbon film	1k		RD¼PS 102J
R26	Carbon film	1k		RD¼PS 102J
R27	Carbon film	24k		RD¼PS 243J
R28	Carbon film	24k		RD¼PS 243J
R29	Carbon film	22k		RD¼PS 223J
R30	Carbon film	22k		RD¼PS 223J
R31	Carbon film	3.9k		RD¼PS 392J
R32	Carbon film	3.9k		RD¼PS 392J
R33	Carbon film	91k		RD¼PS 913J
R34	Carbon film	91k		RD¼PS 913J
R35	Carbon film	270		RD¼PS 271J
R36	Carbon film	270		RD¼PS 271J
R37	Carbon film	150	½W	RD½PS 151J
R38	Carbon film	150	½W	RD½PS 151J
R39	Carbon film	150	½W	RD½PS 151J
R40	Carbon film	150	½W	RD½PS 151J
R41	Carbon film	5.6k		RD¼PS 562J
R42	Carbon film	5.6k		RD¼PS 562J
R43	Metal film	4.7	1W	RN1H 4R7K
R44	Metal film	4.7	1W	RN1H 4R7K
R45	Metal film	4.7	1W	RN1H 4R7K
R46	Metal film	4.7	1W	RN1H 4R7K
R47	Metal film	4.7	1W	RN1H 4R7K
R48	Metal film	4.7	1W	RN1H 4R7K
R49	Metal film	4.7	1W	RN1H 4R7K
R50	Metal film	4.7	1W	RN1H 4R7K
R51	Wire wound	0.5	5W	RT5B 0R5K
R52	Wire wound	0.5	5W	RT5B 0R5K
R53	Wire wound	0.5	5W	RT5B 0R5K
R54	Wire wound	0.5	5W	RT5B 0R5K
R55	Wire wound	0.5	5W	RT5B 0R5K
R56	Wire wound	0.5	5W	RT5B 0R5K
R57	Wire wound	0.5	5W	RT5B 0R5K
R58	Wire wound	0.5	5W	RT5B 0R5K
R59	Carbon film	100		RD¼PS 101J
R60	Carbon film	100		RD¼PS 101J
R61	Carbon film	100		RD¼PS 101J
R62	Carbon film	100		RD¼PS 101J
R63	Metal oxide	10	2W	RS2P 100J
R64	Metal oxide	10	2W	RS2P 100J
R65	Carbon film	100		RD¼PS 101J
R66	Carbon film	100		RD¼PS 101J
R67	Carbon film	100		RD¼PS 101J
R68	Carbon film	100		RD¼PS 101J
R69	Metal oxide	10	1W	RS1P 100J
R70	Metal oxide	10	1W	RS1P 100J
R71	Carbon film	10		RD¼PS 100J
R72	Carbon film	10		RD¼PS 100J
VR1	Semi-fixed	10k-B		ACP-029
VR2	Semi-fixed	10k-B		ACP-029
VR3	Semi-fixed	100-B		ACP-019
VR4	Semi-fixed	100-B		ACP-019

SEMICONDUCTORS

Symbol	Description	Part No.
Q1	Transistor	2SA726S-F 2SA763S-5
Q2	Transistor	2SA726S-F 2SA763S-5
Q3	Transistor	2SA726S-F 2SA763S-5
Q4	Transistor	2SA726S-F 2SA763S-5
Q5	Transistor	2SA818-Y 2SA898-B
Q6	Transistor	2SA818-Y 2SA898-B
Q7	Transistor	2SC1628-Y 2SC1903-B
Q8	Transistor	2SC1628-Y 2SC1903-B
Q9	Transistor	2SD381-M 2SC1903-B
Q10	Transistor	2SD381-M
Q11	Transistor	2SB536-M
Q12	Transistor	2SB536-M
D1	Diode	1S2473
D2	Diode	1S2473
D3	Diode	1S2473
D4	Diode	1S2473
D5	Diode	STV4H
D6	Diode	STV4H
D7	Diode	1S1885
D8	Diode	1S1885
D9	Diode	1S1885
D10	Diode	1S1885

OTHERS

Symbol	Description	Part No.
		ANH-203
L1	Choke coil	T63-009
L2	Choke coil	T63-009
	Heat sink	ANH-203

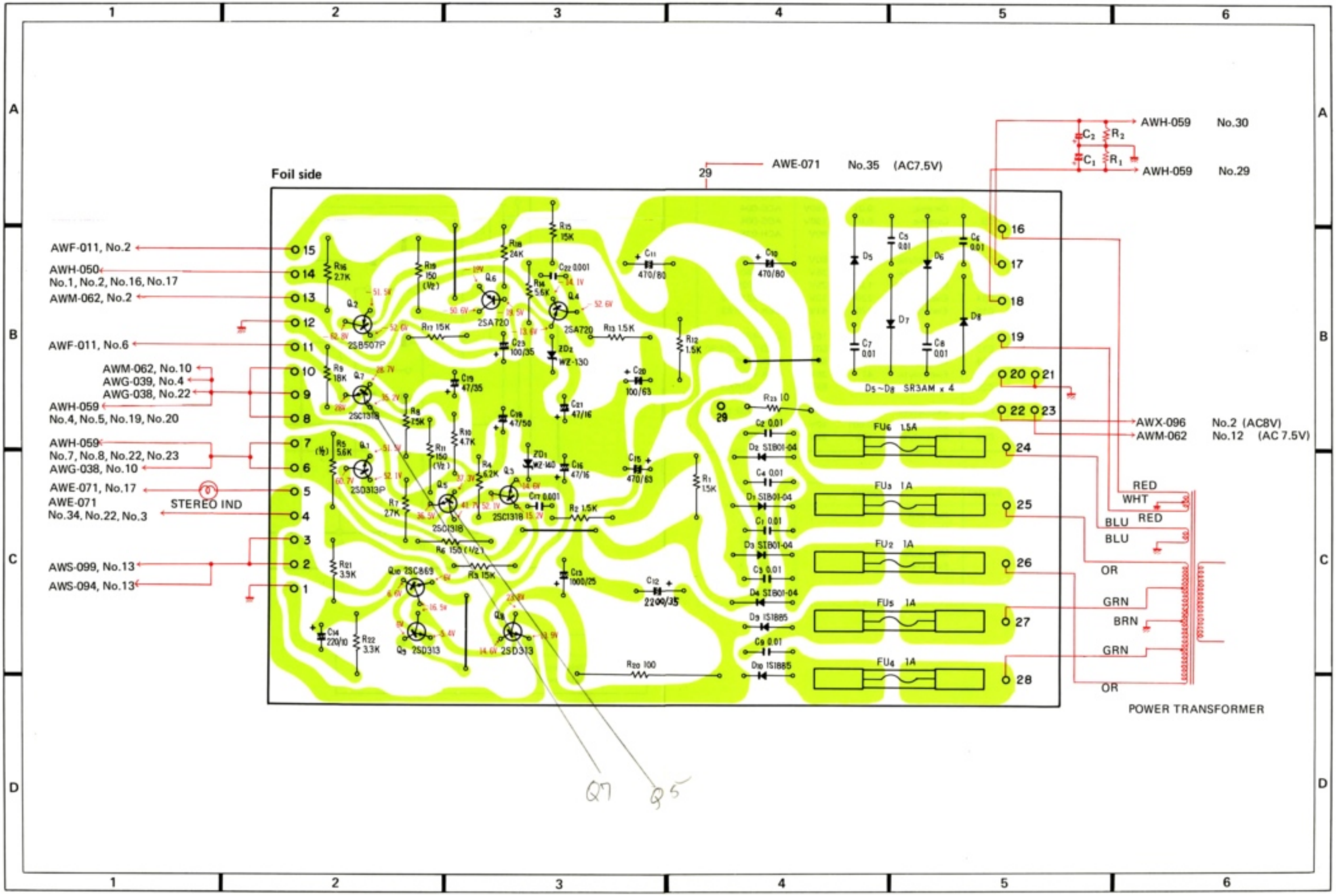
Foil side
AWE-071 No.35 (AC7.5V)
AWH-059 No.30
AWH-059 No.29
AWF-011, No.2
AWH-050
No.1, No.2, No.16, No.17
AWM-062, No.2
AWF-011, No.6
AWM-062, No.10
AWG-039, No.4
AWG-038, No.22
AWH-059
No.4, No.5, No.19, No.20
AWH-059
No.7, No.8, No.22, No.23
AWG-038, No.10
AWE-071, No.17
AWE-071
No.34, No.22, No.3
STEREO IND
AWS-099, No.13
AWS-094, No.13
AWX-096 No.2 (AC8V)
AWM-062 No.12 (AC 7.5V)
RED
WHT
RED
BLU
BLU
OR
GRN
BRN
GRN
OR
POWER TRANSFORMER
D5~D8 SR3AM x 4
FU6 1.5A
FU3 1A
FU2 1A
FU5 1A
FU4 1A
2SB507P
2SA720
2SC1318
2SC869
2SD313
2SD313P
WZ-130
IS1885
Q7
Q5

Parts List of Power Supply Assembly (AWR-101)

SEMICONDUCTORS

Symbol	Description	Part No.
Q1	Transistor	2SD313P-E
Q2	Transistor	2SB507P-E
Q3	Transistor	2SC1318-Q
Q4	Transistor	2SA720-Q
Q5	Transistor	2SC1318-Q
Q6	Transistor	2SA720-Q
Q7	Transistor	2SC1318-Q
Q8	Transistor	2SD313-E
Q9	Transistor	2SD313-E
Q10	Transistor	2SC869-C
D1	Diode	SIB01-04
D2	Diode	SIB01-04
D3	Diode	SIB01-04
D4	Diode	SIB01-04
D5	Diode	SR3AM-8
D6	Diode	SR3AM-8
D7	Diode	SR3AM-8
D8	Diode	SR3AM-8
D9	Diode	1S1885
D10	Diode	1S1885
D11	Zener diode	WZ-140
D12	Zener diode	WZ-130

RESISTORS

Symbol	Description			Part No.
R1	Carbon film	1.5k		RD¼PS 152J
R2	Carbon film	1.5k		RD¼PS 152J
R3	Carbon film	15k		RD¼PS 153J
R4	Carbon film	6.2k		RD¼PS 622J
R5	Carbon film	5.6k	½W	RD½PS 562J
R6	Carbon film	150	½W	RD½PS 151J
R7	Carbon film	2.7k		RD¼PS 272J
R8	Carbon film	7.5k		RD¼PS 752J
R9	Carbon film	18k		RD¼PS 183J
R10	Carbon film	4.7k		RD¼PS 472J
R11	Carbon film	150	½W	RD½PS 151J
R12	Carbon film	1.5k		RD¼PS 152J
R13	Carbon film	1.5k		RD¼PS 152J
R14	Carbon film	5.6k		RD¼PS 562J
R15	Carbon film	15k		RD¼PS 153J
R16	Carbon film	2.7k	½W	RD½PS 272J
R17	Carbon film	15k		RD¼PS 153J
R18	Carbon film	24k		RD¼PS 243J
R19	Carbon film	150	½W	RD½PS 151J
R20	Metal oxide	100	3W	RS3P 101J
R21	Carbon film	3.9k		RD¼PS 392J
R22	Carbon film	3.3k		RD¼PS 332J
R23	Carbon film	10		RD¼PS 100J

CAPACITORS

Symbol	Description			Part No.
C1	Ceramic	0.01	150V	ACG-004
C2	Ceramic	0.01	150V	ACG-004
C3	Ceramic	0.01	150V	ACG-004
C4	Ceramic	0.01	150V	ACG-004
C5	Ceramic	0.01	150V	ACG-004
C6	Ceramic	0.01	150V	ACG-004
C7	Ceramic	0.01	150V	ACG-004
C8	Ceramic	0.01	150V	ACG-004
C9	Ceramic	0.01	150V	ACG-004
C10	Electrolytic	470	80V	ACH-038
C11	Electrolytic	470	80V	ACH-038
C12	Electrolytic	2,200	35V	ACH-060
C13	Electrolytic	1,000	25V	CEA 102P 25
C14	Electrolytic	220	10V	CEA 221P 10
C15	Electrolytic	470	63V	CEA 471P 63
C16	Electrolytic	47	16V	CEA 470P 16
C17	Ceramic	0.001	50V	CKDYF 102Z 50
C18	Electrolytic	47	50V	CEA 470P 50
C19	Electrolytic	47	35V	CEA 470P 35
C20	Electrolytic	100	63V	CEA 101P 63
C21	Electrolytic	47	16V	CEA 470P 16
C22	Ceramic	0.001	50V	CKDYF 102Z 50
C23	Electrolytic	100	35V	CEA 101P 35

OTHERS

Symbol	Description	Part No.
	Heat sink	ANH-117
	Heat sink	ANH-207
	Transistor socket	AKH-002
	Mica wafer	AEC-043
	Fuse clip	AKR-013
	Fuse clip	AKR-030

12.14 SWITCH ASSEMBLY (AWS-099)

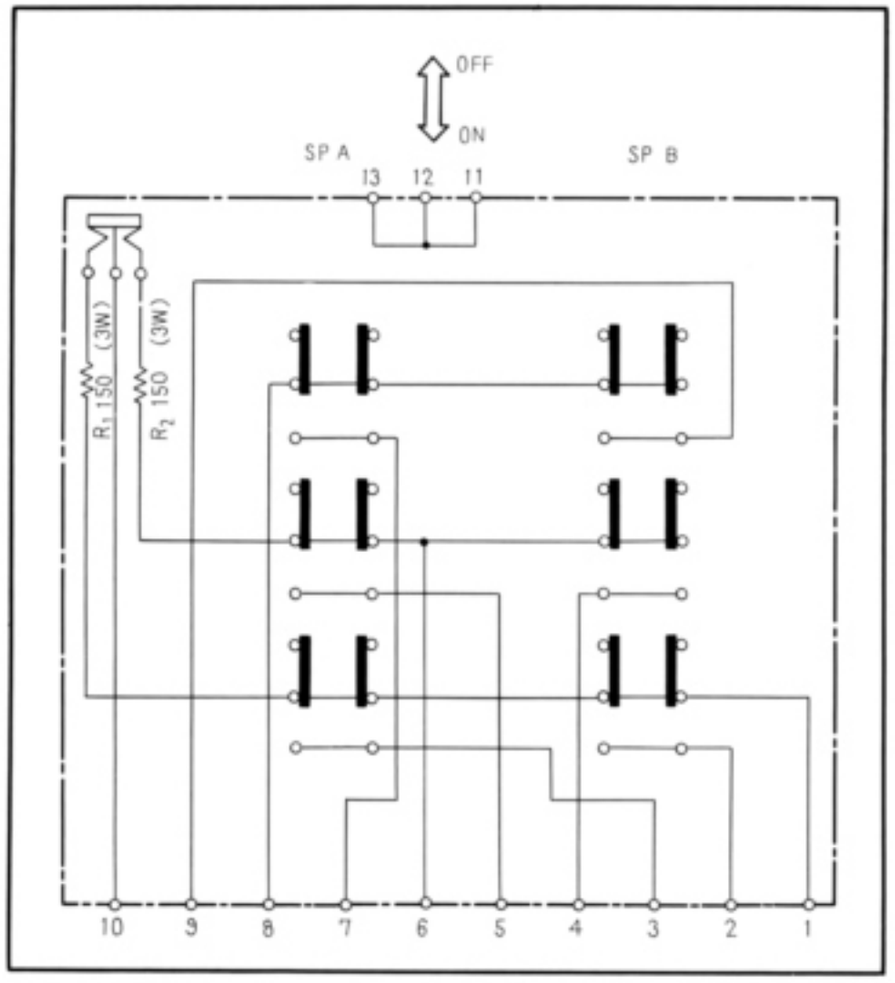

RESISTORS

Symbol	Description			Part No.
R1	Metal oxide	150	3W	RS3P 151K
R2	Metal oxide	150	3W	RS3P 151K

SWITCH

Symbol	Description	Part No.
S1	Push switch (SPEAKERS)	ASG-113

OTHERS

Symbol	Description	Part No.
J1	Phone jack (PHONES)	AKN-010

AM/FM STEREO RECEIVER

SX-850

KC,KU

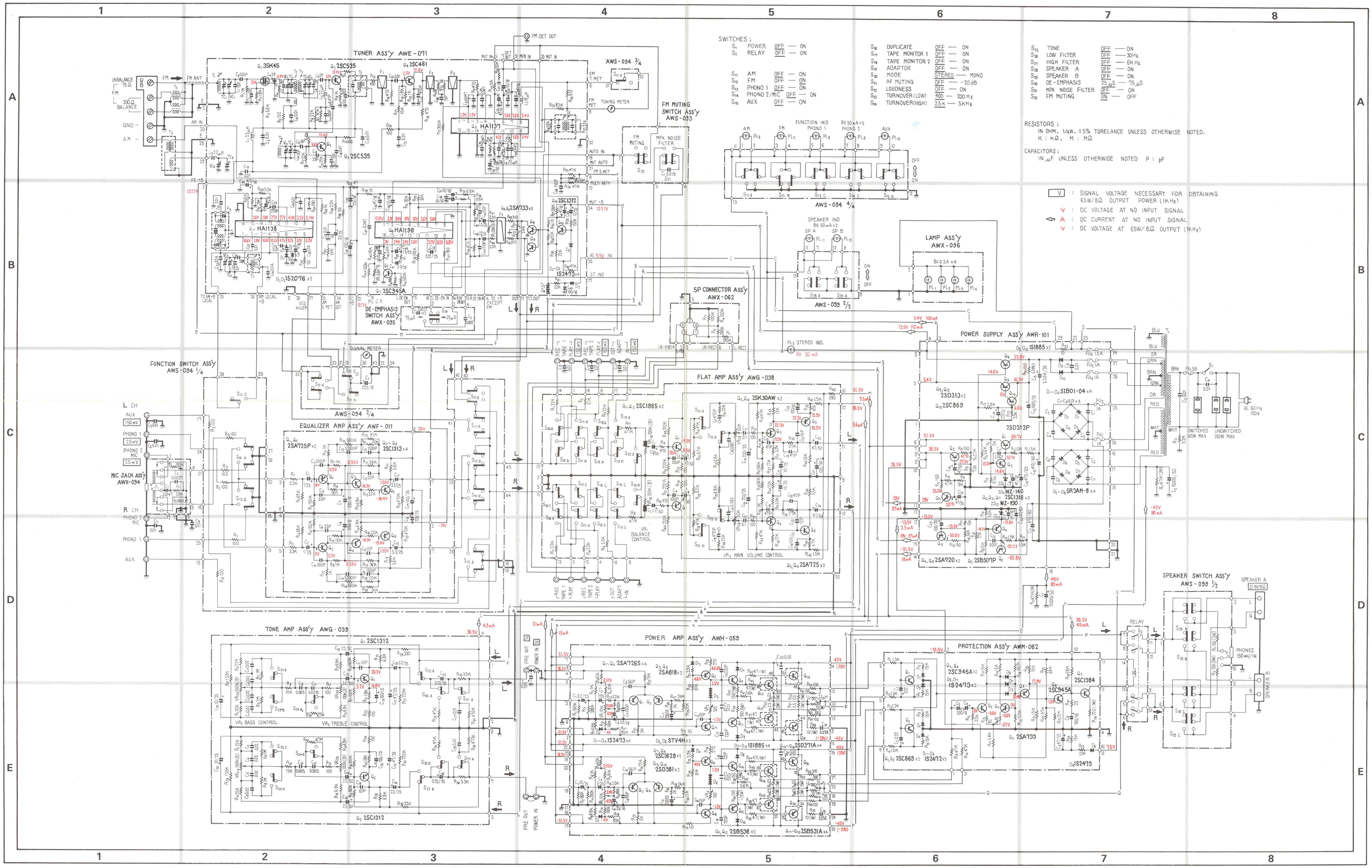

SWITCHES ;

S_1	POWER	OFF	— ON
S_2	RELAY	OFF	— ON
S_{11}	AM	OFF	— ON
S_{12}	FM	OFF	— ON
S_{13}	PHONO 1	OFF	— ON
S_{14}	PHONO 2/MIC	OFF	— ON
S_{15}	AUX	OFF	— ON
S_{16}	DUPLICATE	OFF	— ON
S_{17}	TAPE MONITOR 1	OFF	— ON
S_{18}	TAPE MONITOR 2	OFF	— ON
S_{19}	ADAPTOR	OFF	— ON
S_{20}	MODE	STEREO	— MONO
S_{21}	AF MUTING	OFF	— -20dB
S_{22}	LOUDNESS	OFF	— ON
S_{23}	TURNOVER (LOW)	400	— 200Hz
S_{24}	TURNOVER (HIGH)	2.5K	— 5KHz
S_{25}	TONE	OFF	— ON
S_{26}	LOW FILTER	OFF	— 30Hz
S_{27}	HIGH FILTER	OFF	— 6KHz
S_{28}	SPEAKER A	OFF	— ON
S_{29}	SPEAKER B	OFF	— ON
S_{30}	DE-EMPHASIS	75 μS	— 75 μS
S_{31}	MPX NOISE FILTER	OFF	— ON
S_{32}	FM MUTING	ON	— OFF

RESISTORS ;
IN OHM, 1/4W, ±5% TORELANCE UNLESS OTHERWISE NOTED.
K : kΩ, M : MΩ

CAPACITORS ;
IN μF UNLESS OTHERWISE NOTED P : pF

V : SIGNAL VOLTAGE NECESSARY FOR OBTAINING 65W/8Ω OUTPUT POWER (1KHz)
V : DC VOLTAGE AT NO INPUT SIGNAL
A : DC CURRENT AT NO INPUT SIGNAL
V : DC VOLTAGE AT 65W/8Ω OUTPUT (1KHz)

AM/FM STEREO RECEIVER

SX-850 HG

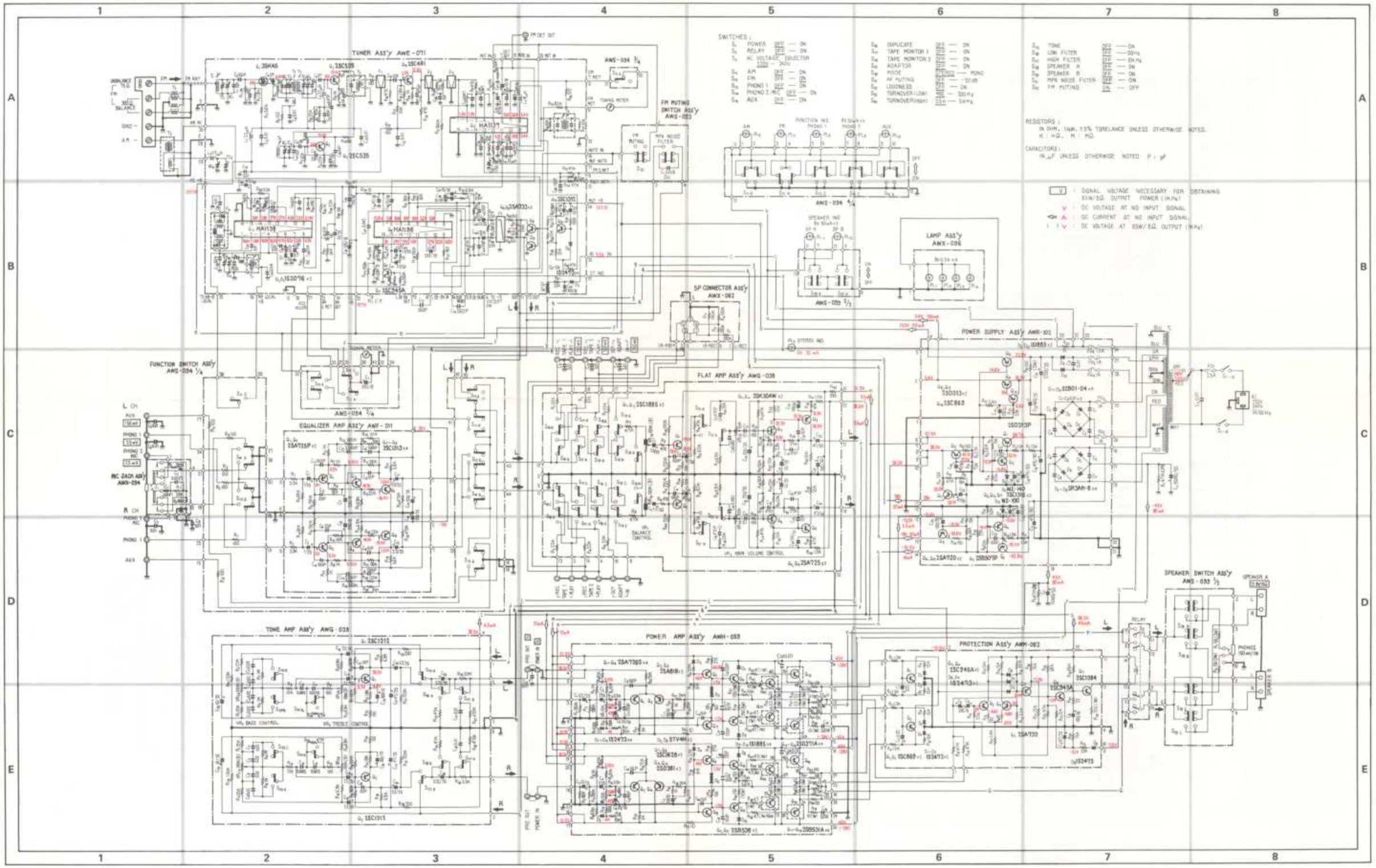

AM/FM STEREO RECEIVER

SX-850 S

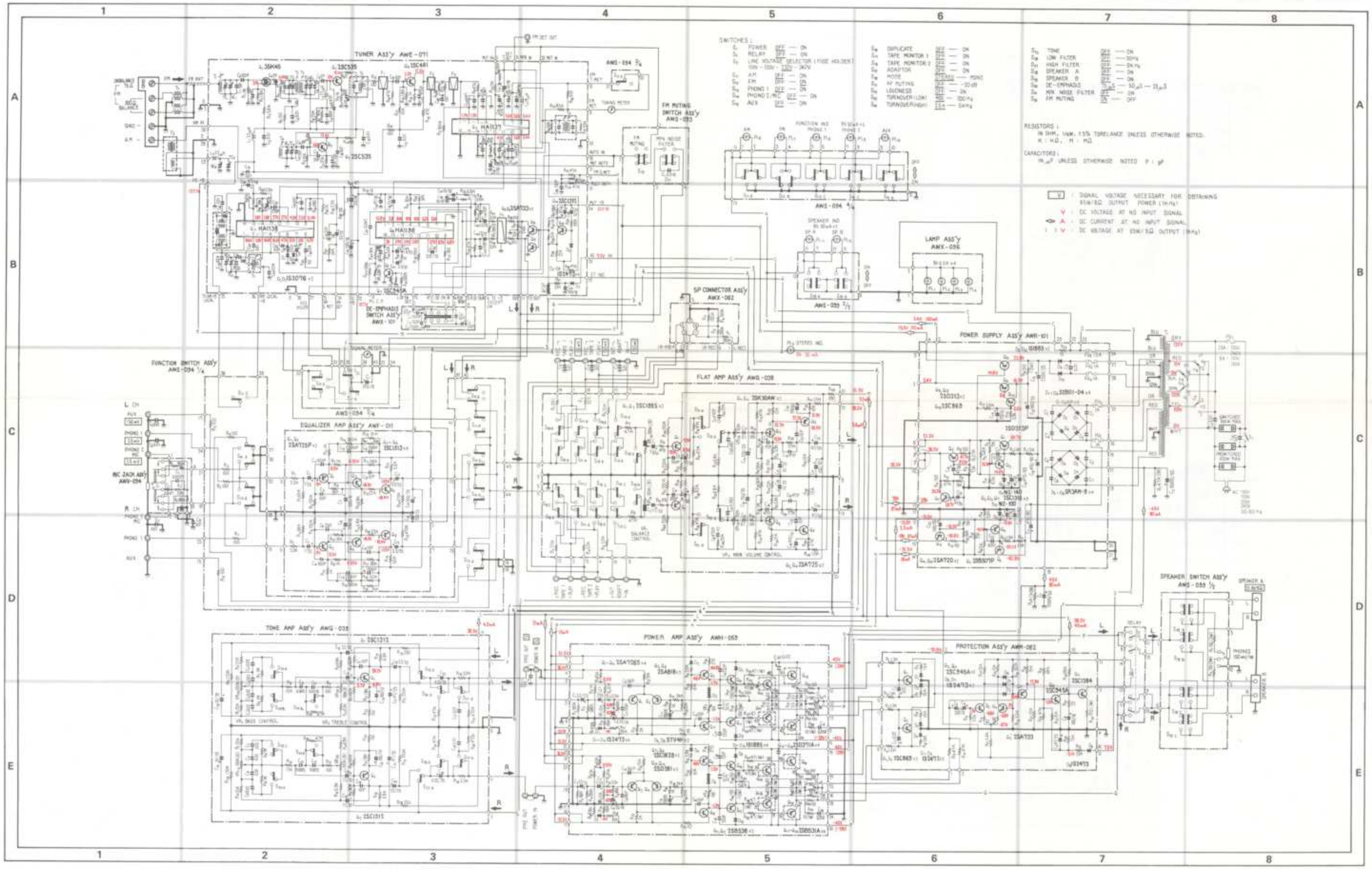

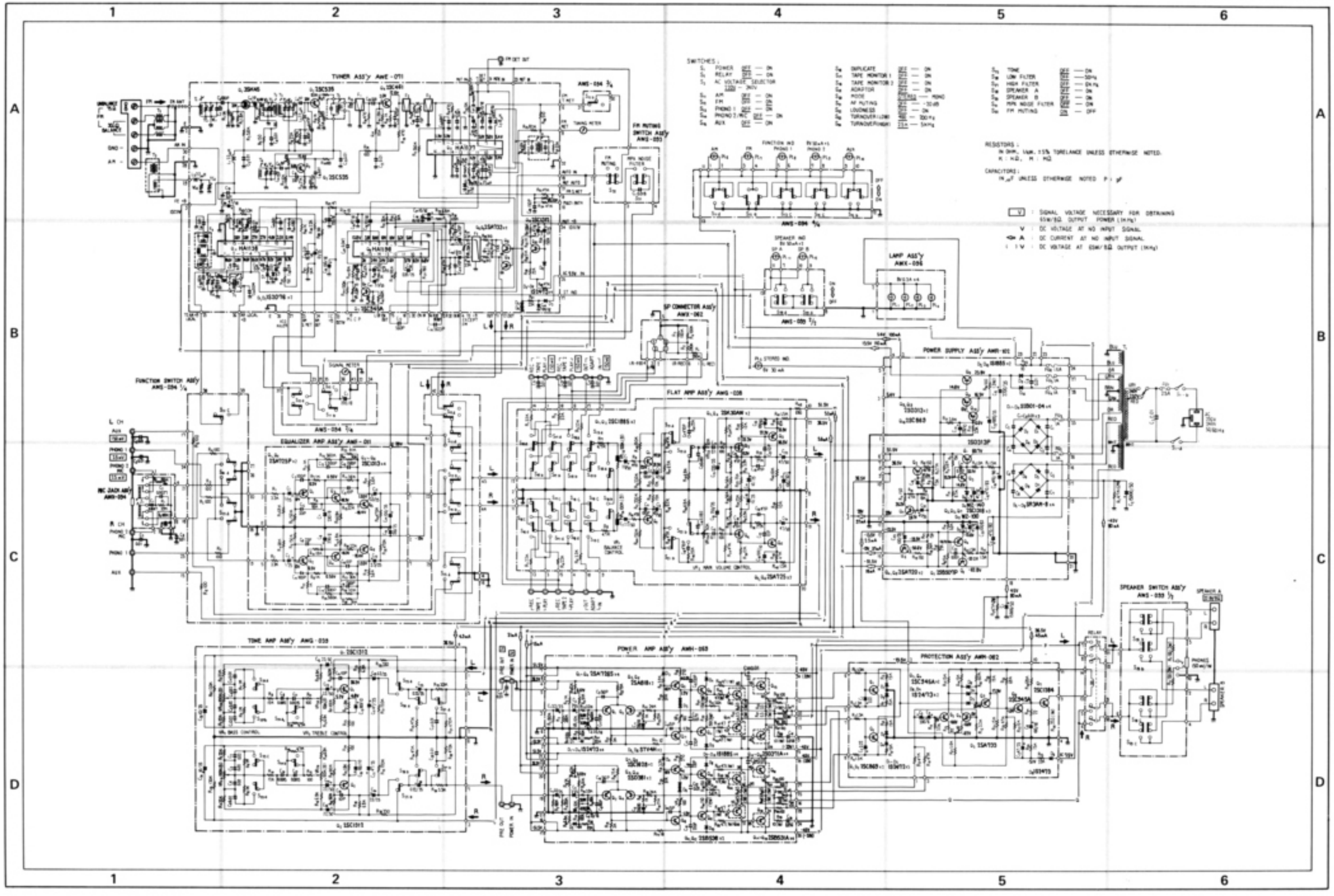
TUNER ASS'Y AWE-071
FM MUTING SWITCH ASS'Y AWG-050
SP CONNECTOR ASS'Y AWG-062
LAMP ASS'Y AWX-096
POWER SUPPLY ASS'Y AWR-101
FUNCTION SWITCH ASS'Y AWG-094
EQUALIZER AMP ASS'Y AWG-001
FLAT AMP ASS'Y AWG-028
TONE AMP ASS'Y AWG-030
POWER AMP ASS'Y AWH-003
PROTECTION ASS'Y AWH-002
SPEAKER SWITCH ASS'Y AWG-050
SWITCHES :
RESISTORS :
CAPACITORS :
V : DC VOLTAGE AT NO INPUT SIGNAL
A : DC CURRENT AT NO INPUT SIGNAL

2, POWER SUPPLY ASSEMBLY (AWR-102)

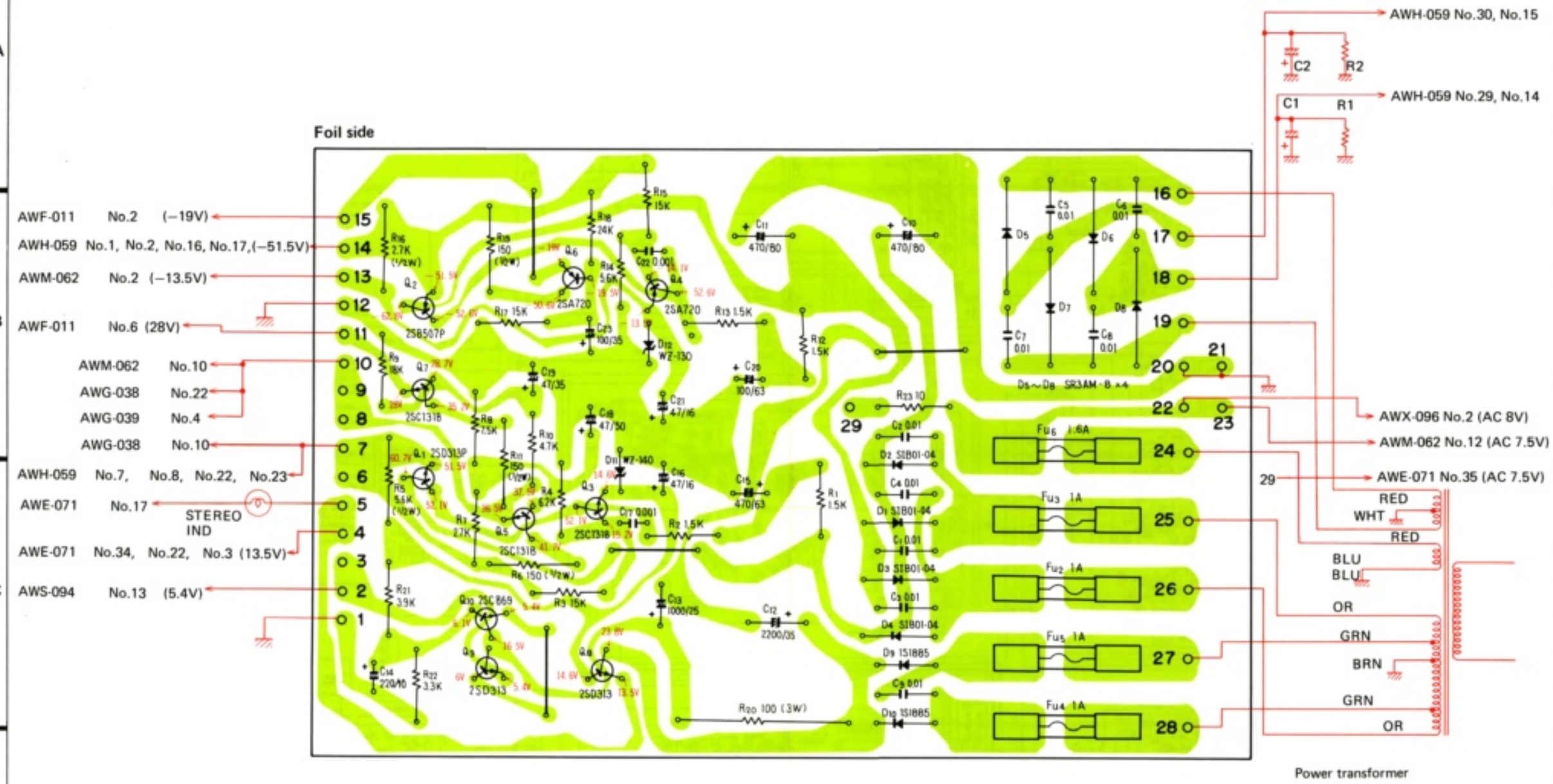

〈76I05M078〉

PIONEER ELECTRONIC CORPORATION
4-1, Meguro 1-Chome, Meguro-ku, Tokyo 153, Japan
U.S. PIONEER ELECTRONICS CORPORATION
75 Oxford Drive, Moonachie, New Jersey 07074, U.S.A.
PIONEER ELECTRONIC (EUROPE) N.V.
Luithagen-Haven 9, 2030 Antwerp, Belgium
PIONEER ELECTRONICS AUSTRALIA PTY. LTD.
178-184 Boundary Road, Braeside, Victoria 3195, Australia

〈ARB-175-0〉 Printed in Japan