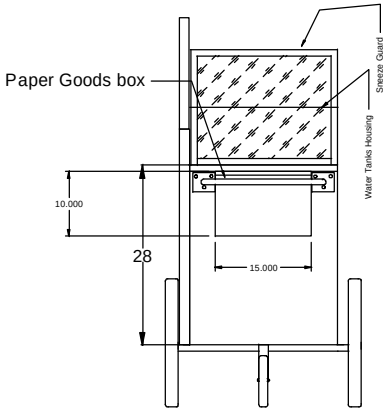

Handle Bar End Elevation View

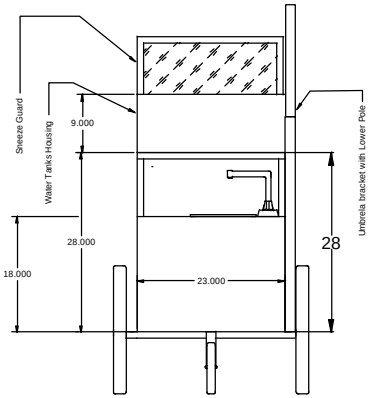

Sink (Caster) End Elevation View

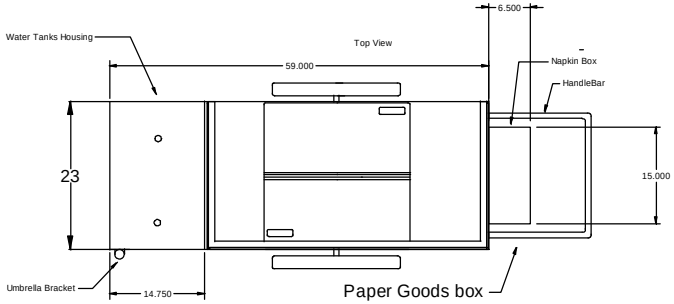

Plan View (for refernce only)- no branding

Sizing Template for Turnkey Parlor Custom Non Mechanical Cart- order 1248134

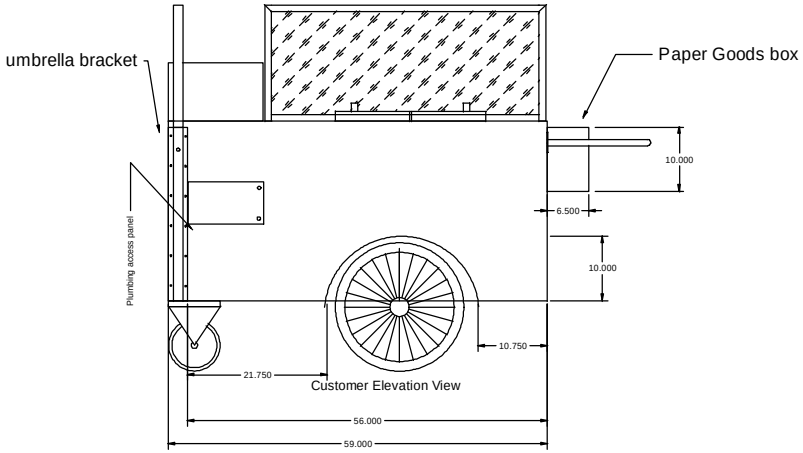

Customer Elevation View

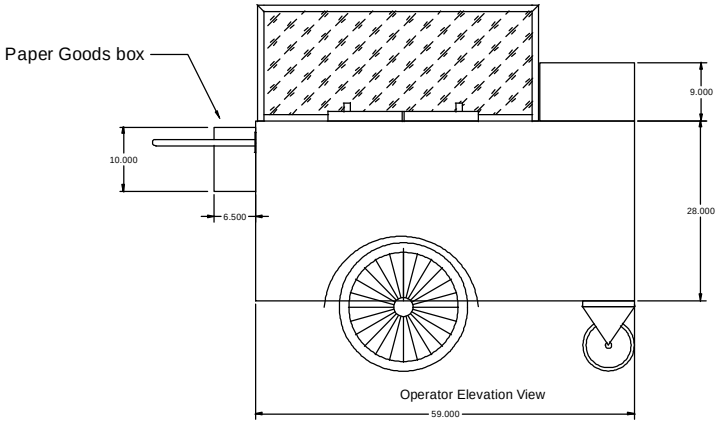

Operator Elevation View