MoDeCH

Global Design Infrastructure Innovation

PMIC
SPICE Model Report

Product Type：BM2P0161-Z

2020.02.25-J
2020.10.05-E

http://www.modech.com/

Agenda

- 1. Model Specifications
- 2. Verification conditions of the model
- 3. Verification results

1. Model Specifications

- 1.1 Supported model features
- 1.2 Characteristics of the model
- 1.2 Terminal definitions

1.1 Supported Model Features

Feature	Model Supported
Circuit Start	○
VCC UVLO	○
VCC OVP	–
Switching Frequency Hopping Function	–
Burst Operation	○
Frequency Reduction Operation	○
Burst Frequency Setting	–
Over Current Limiter	○
AC Voltage Compensation Function	○
L.E.B (Leading Edge Blanking) Function	○
SOURCE Pin Short Protection Function	–
SOURCE Pin Open Protection	–
Output Over Load Protection Function	–

1.2.1 Characteristics of the Model

Electrical Characteristics – continued

Parameter	Symbol	Specifications Min	Typ	Max	Unit	Conditions
[Circuit Current]						
Circuit Current (ON) 1	I_{ON1}	-	900	1450	μA	V_{FB}=2.0 V (at pulse operation) (BM2P0161-Z)
Circuit Current (ON) 1	I_{ON1}	-	850	1050	μA	V_{FB}=2.0 V (at pulse operation) (BM2P0361-Z)
Circuit Current (ON) 2	I_{ON2}	150	300	450	μA	V_{FB}=0.3 V
[VCC Protection Function]						
VCC UVLO Voltage 1	V_{UVLO1}	12.50	13.50	14.50	V	VCC rise
VCC UVLO Voltage 2	V_{UVLO2}	7.50	8.20	8.90	V	VCC fall
VCC UVLO Hysteresis	V_{UVLO3}	-	5.30	-	V	V_{UVLO3}=V_{UVLO1}-V_{UVLO2}
VCC OVP Voltage 1	V_{OVP1}	26.0	27.5	29.0	V	VCC rise
VCC OVP Voltage 2	V_{OVP2}	22.0	23.5	25.0	V	VCC fall
VCC OVP Hysteresis	V_{OVP3}	-	4.0	-	V	V_{OVP3}=V_{OVP1}-V_{OVP2}
VCC Recharge Start Voltage	V_{CHG1}	7.70	8.70	9.70	V	
VCC Recharge Stop Voltage	V_{CHG2}	12.00	13.00	14.00	V	
Latch Mask Time	t_{LATCH}	50	100	150	μs	
Thermal Shutdown Temperature 1	T_{SD1}	120	145	170	°C	Control IC, temperature rise
Thermal Shutdown Temperature 2	T_{SD2}	90	115	140	°C	Control IC, temperature fall
[PWM Type DC/DC Driver Block]						
Oscillation Frequency 1	f_{SW1}	60	65	70	kHz	V_{FB}=2.00 V
Oscillation Frequency 2	f_{SW2}	20	25	30	kHz	V_{FB}=0.30 V
Frequency Hopping Width 1	f_{DEL1}	-	4.0	-	kHz	V_{FB}=2.0 V
Hopping Fluctuation Frequency	f_{CH}	75	125	175	Hz	
FADJ Source Current	I_{BST}	0.80	1.00	1.20	μA	FADJ=0.0 V
FADJ Comparator Voltage	V_{BST}	1.13	1.20	1.27	V	
FADJ Max Burst Frequency	f_{BST}	-	0.833	-	kHz	C_{FADJ}=1000 pF
Soft Start Time 1	t_{SS1}	0.30	0.50	0.70	ms	
Soft Start Time 2	t_{SS2}	0.60	1.00	1.40	ms	
Soft Start Time 3	t_{SS3}	1.20	2.00	2.80	ms	
Soft Start Time 4	t_{SS4}	4.80	8.00	11.20	ms	
Maximum Duty	D_{MAX}	68.0	75.0	82.0	%	
Minimum ON Time	t_{MIN}	150	400	650	ns	
FB Pin Pull-Up Resistance	R_{FB}	23	30	37	kΩ	
ΔFB / ΔSOURCE Gain	Gain	3.00	4.00	7.00	V/V	
FB Burst Voltage 1	V_{BST1}	0.220	0.280	0.340	V	FB fall
FB Burst Voltage 2	V_{BST2}	0.260	0.320	0.380	V	FB rise
FB Burst Hysteresis	V_{BST3}	-	0.040	-	V	V_{BST3}=V_{BST2}-V_{BST1}
FB Voltage of Starting Frequency Reduction	V_{DLT}	1.100	1.250	1.400	V	
FB OLP Voltage 1a	V_{FOLP1A}	2.60	2.80	3.00	V	Overload is detected (FB rise)
FB OLP Voltage 1b	V_{FOLP1B}	2.40	2.60	2.80	V	Overload is detected (FB fall)
FB OLP ON Detect Timer	t_{FOLP1}	80	128	176	ms	
FB OLP OFF Timer	t_{FOLP2}	332	512	692	ms	

All fitting is done at 25°C

1.2.2 Characteristics of the Model

Electrical Characteristics – continued

Parameter	Symbol	Specifications			Unit	Conditions
		Min	Typ	Max		
[Over Current Detection Block]						
Over-Current Detection Voltage	V_{SOURCE}	0.375	0.400	0.425	V	t_{ON}=0 µs
Over-Current Detection Voltage SS1	V_{SOURCE_SS1}	0.050	0.100	0.150	V	0 ms to t_{SS1} ms
Over-Current Detection Voltage SS2	V_{SOURCE_SS2}	0.080	0.150	0.220	V	t_{SS1} ms to t_{SS2} ms
Over-Current Detection Voltage SS3	V_{SOURCE_SS3}	0.130	0.200	0.270	V	t_{SS2} ms to t_{SS3} ms
Over-Current Detection Voltage SS4	V_{SOURCE_SS4}	0.230	0.300	0.370	V	t_{SS3} ms to t_{SS4} ms
Leading Edge Blanking Time	t_{LEB}	120	250	380	ns	*(Note 2)*
Over Current Detection AC Voltage Compensation Factor	K_{SOURCE}	12	20	28	mV/µs	
SOURCE Pin Short Protection Voltage	$V_{SOURCESHT}$	0.020	0.050	0.080	V	
SOURCE Pin Short Protection Time	$t_{SOURCESHT}$	1.80	3.00	4.20	µs	
[Circuit Current]						
Start Current 1	I_{START1}	0.100	0.500	1.000	mA	VCC=0 V
Start Current 2	I_{START2}	1.000	3.000	6.000	mA	VCC=10 V
OFF Current	I_{START3}	-	10	20	µA	Inflow current from the DRAIN pin after UVLO is released and when MOSFET is OFF
Start Current Switching Voltage	V_{SC}	0.800	1.500	2.100	V	

(Note 2) Not 100 % tested.

All fitting is done at 25°C

1.3 Terminal Definitions

Pin Description

Pin No.	Pin Name	I/O	Function	ESD Diode	
				VCC	GND
1	SOURCE	I/O	MOSFET SOURCE pin	✓	✓
2	FADJ	I	Burst frequency setting pin	✓	✓
3	GND	I/O	GND pin	✓	-
4	FB	I	Feedback signal input pin	✓	✓
5	VCC	I	Power supply input pin	-	✓
6	DRAIN	I/O	MOSFET DRAIN pin	-	-
7	DRAIN	I/O	MOSFET DRAIN pin	-	-

Symbol

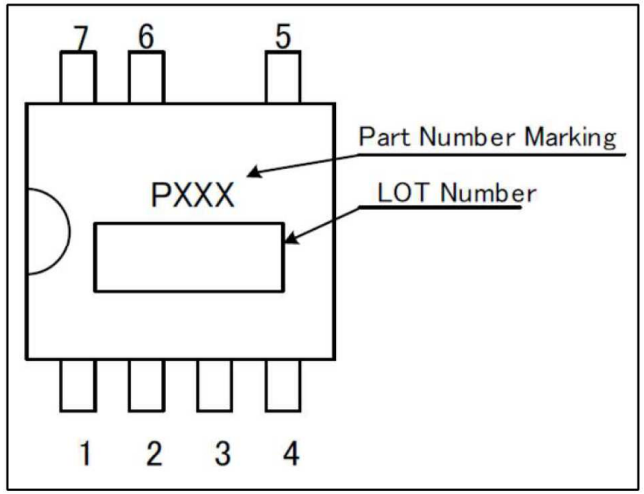

- Defined for al pins
- Diode Clamp exists in the model inside the FADJ terminal

2. Verification Conditions of the Model

- Simulator
  - LTspiceVXII

- Analysis Setting
  - options tnom=25

2. Verification Results

- 2.1 PWM Mode
- 2.2 Frequency Reduction (PMM) Mode
- 2.3 Burst Mode
- 2.4 UVLO

2.1.1 PWM Model

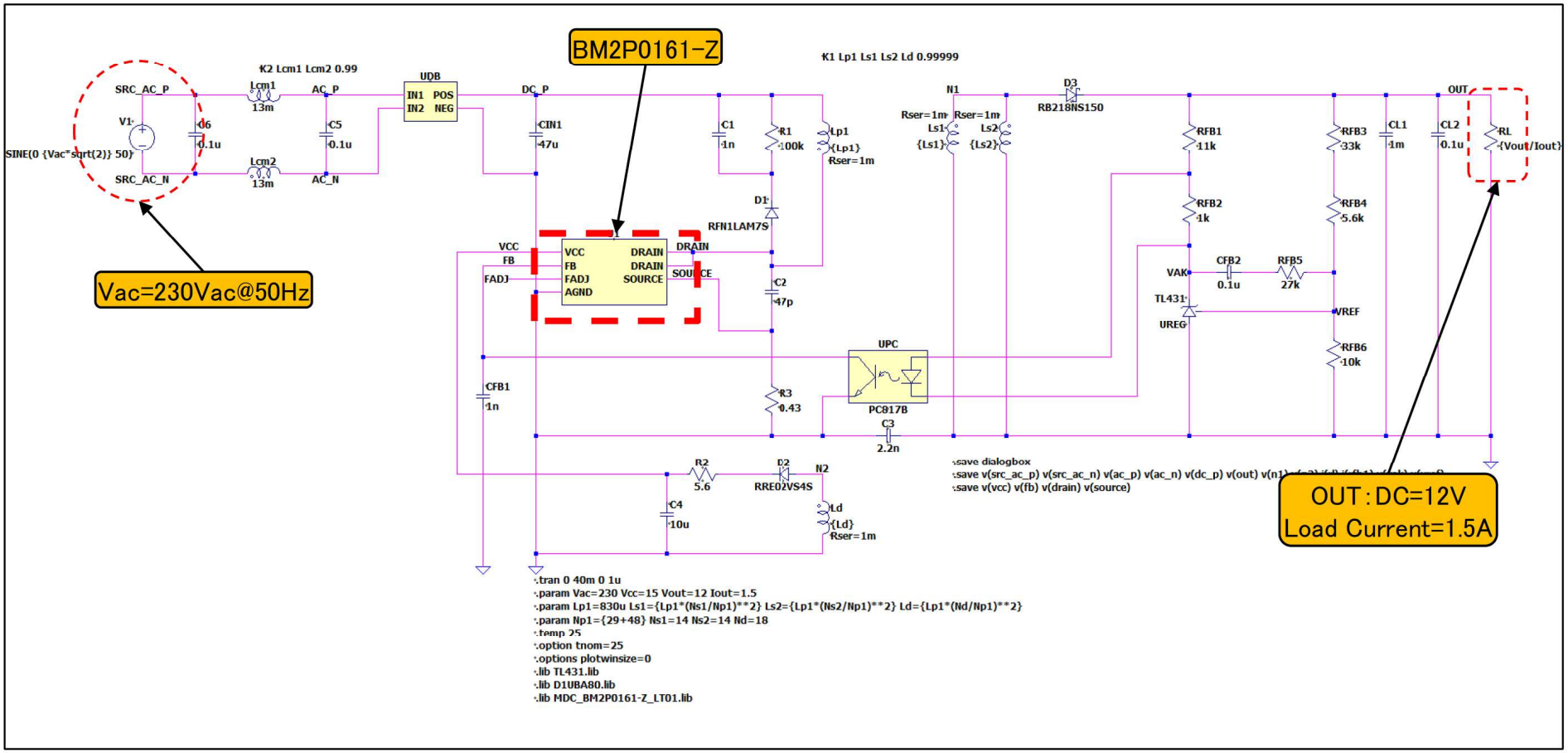

2.1.2 PWM Mode

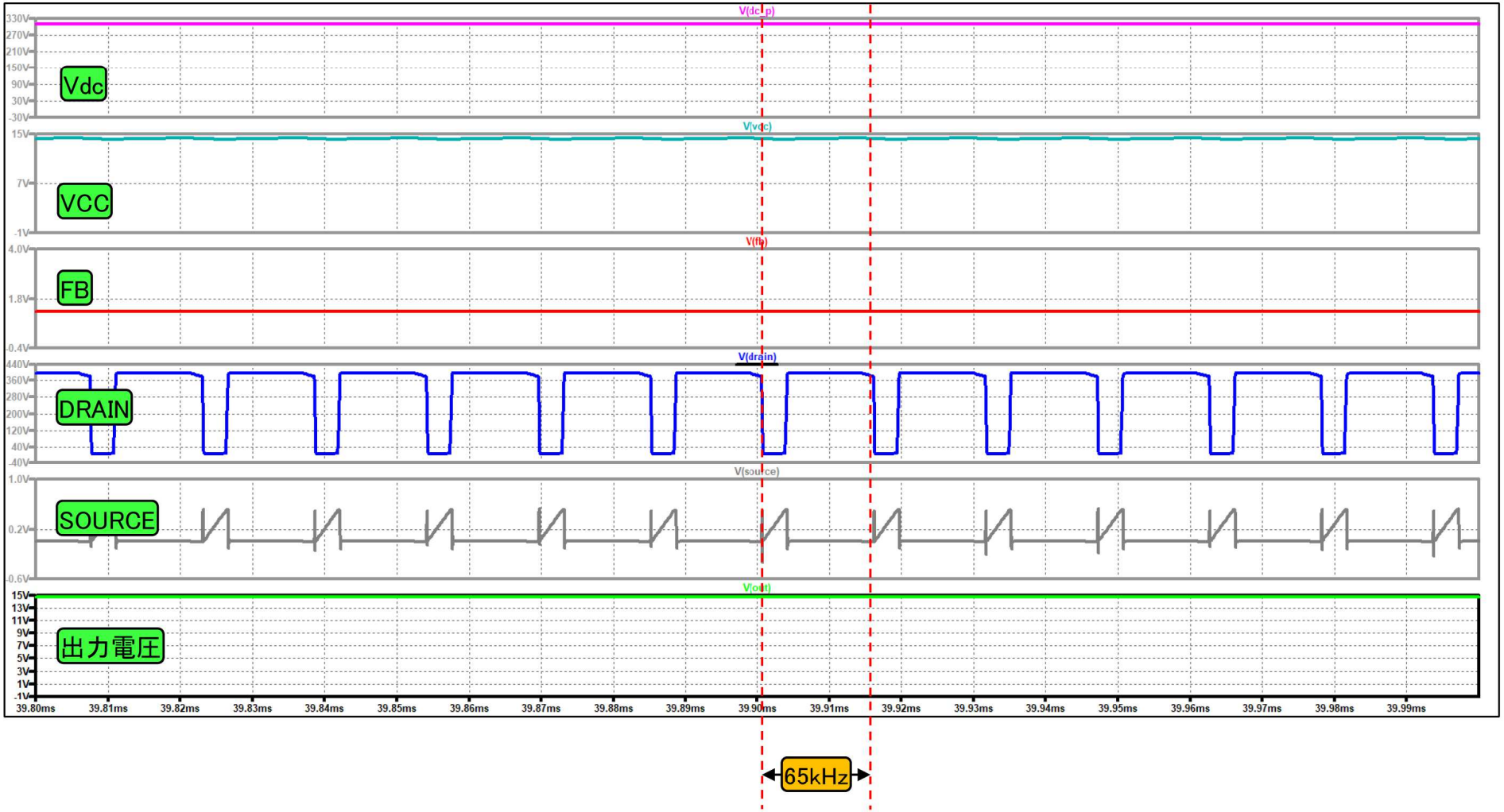
V(dc_p)
Vdc
V(vcc)
VCC
V(fb)
FB
V(drain)
DRAIN
V(source)
SOURCE
V(out)
出力電圧
39.80ms
39.81ms
39.82ms
39.83ms
39.84ms
39.85ms
39.86ms
39.87ms
39.88ms
39.89ms
39.90ms
39.91ms
39.92ms
39.93ms
39.94ms
39.95ms
39.96ms
39.97ms
39.98ms
39.99ms
65kHz

2.2.1 PFM Mode

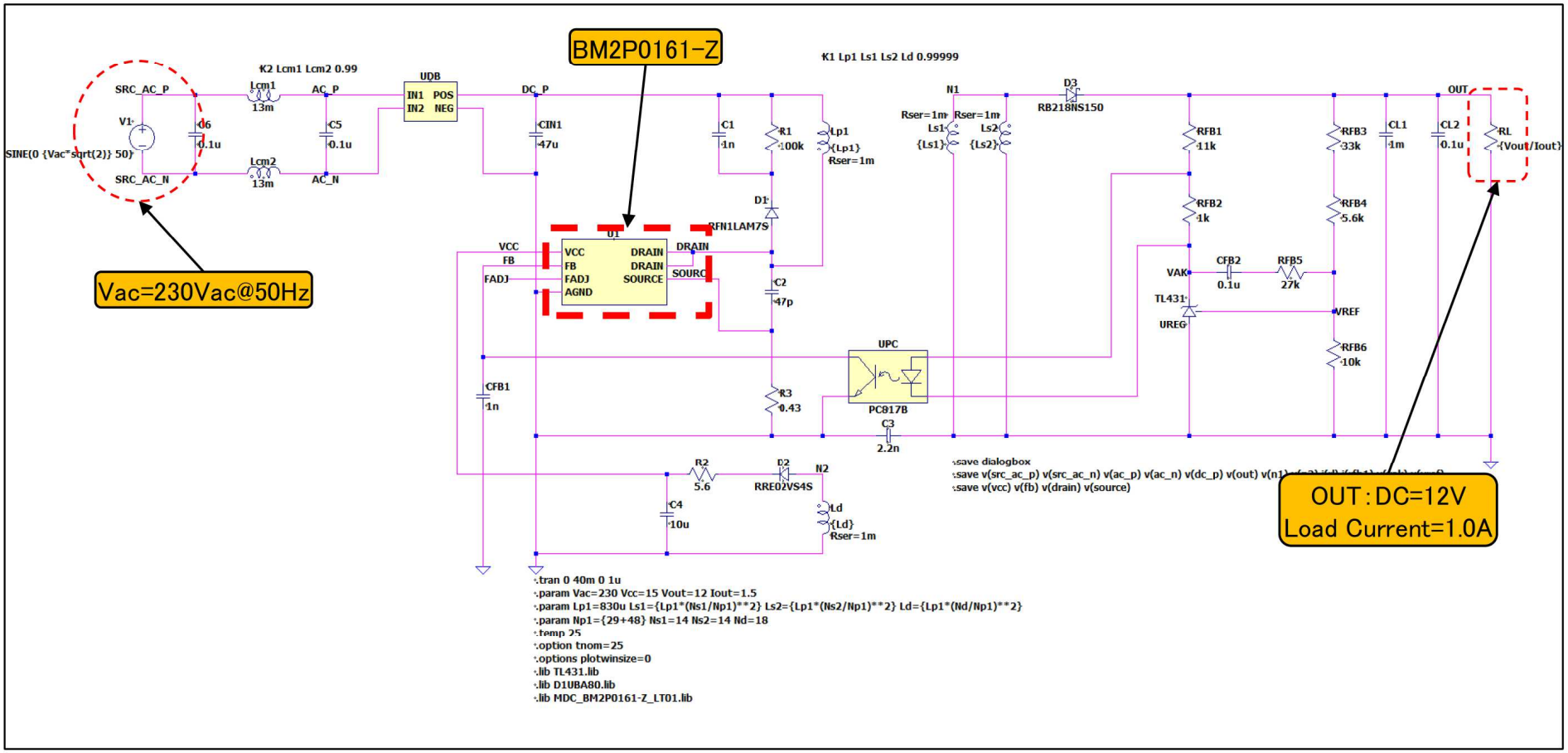
BM2P0161-Z
Vac=230Vac@50Hz
OUT : DC=12V
Load Current=1.0A
K2 Lcm1 Lcm2 0.99
K1 Lp1 Ls1 Ls2 Ld 0.99999
SRC_AC_P
SRC_AC_N
V1
SINE(0 {Vac*sqrt(2)} 50)
C6
0.1u
Lcm1
13m
Lcm2
13m
AC_P
AC_N
C5
0.1u
UDB
IN1 POS
IN2 NEG
DC_P
CIN1
47u
C1
1n
R1
100k
Lp1
{Lp1}
Rser=1m
D1
RFN1LAM7S
U1
VCC
FB
FADJ
AGND
DRAIN
DRAIN
SOURCE
C2
47p
CFB1
1n
R3
0.43
UPC
PC817B
C3
2.2n
R2
5.6
D2
RRE02VS4S
N2
C4
10u
Ld
{Ld}
Rser=1m
N1
Rser=1m
Ls1
{Ls1}
Rser=1m
Ls2
{Ls2}
D3
RB218NS150
RFB1
11k
RFB2
1k
VAK
CFB2
0.1u
RFB5
27k
TL431
UREG
VREF
RFB3
33k
RFB4
5.6k
RFB6
10k
CL1
1m
CL2
0.1u
OUT
RL
{Vout/Iout}
.save dialogbox
.save v(src_ac_p) v(src_ac_n) v(ac_p) v(ac_n) v(dc_p) v(out)
.save v(vcc) v(fb) v(drain) v(source)
.tran 0 40m 0 1u
.param Vac=230 Vcc=15 Vout=12 Iout=1.5
.param Lp1=830u Ls1={Lp1*(Ns1/Np1)**2} Ls2={Lp1*(Ns2/Np1)**2} Ld={Lp1*(Nd/Np1)**2}
.param Np1={29+48} Ns1=14 Ns2=14 Nd=18
.temp 25
.option tnom=25
.options plotwinsize=0
.lib TL431.lib
.lib D1UBA80.lib
.lib MDC_BM2P0161-Z_LT01.lib

2.2.2 PFM Mode

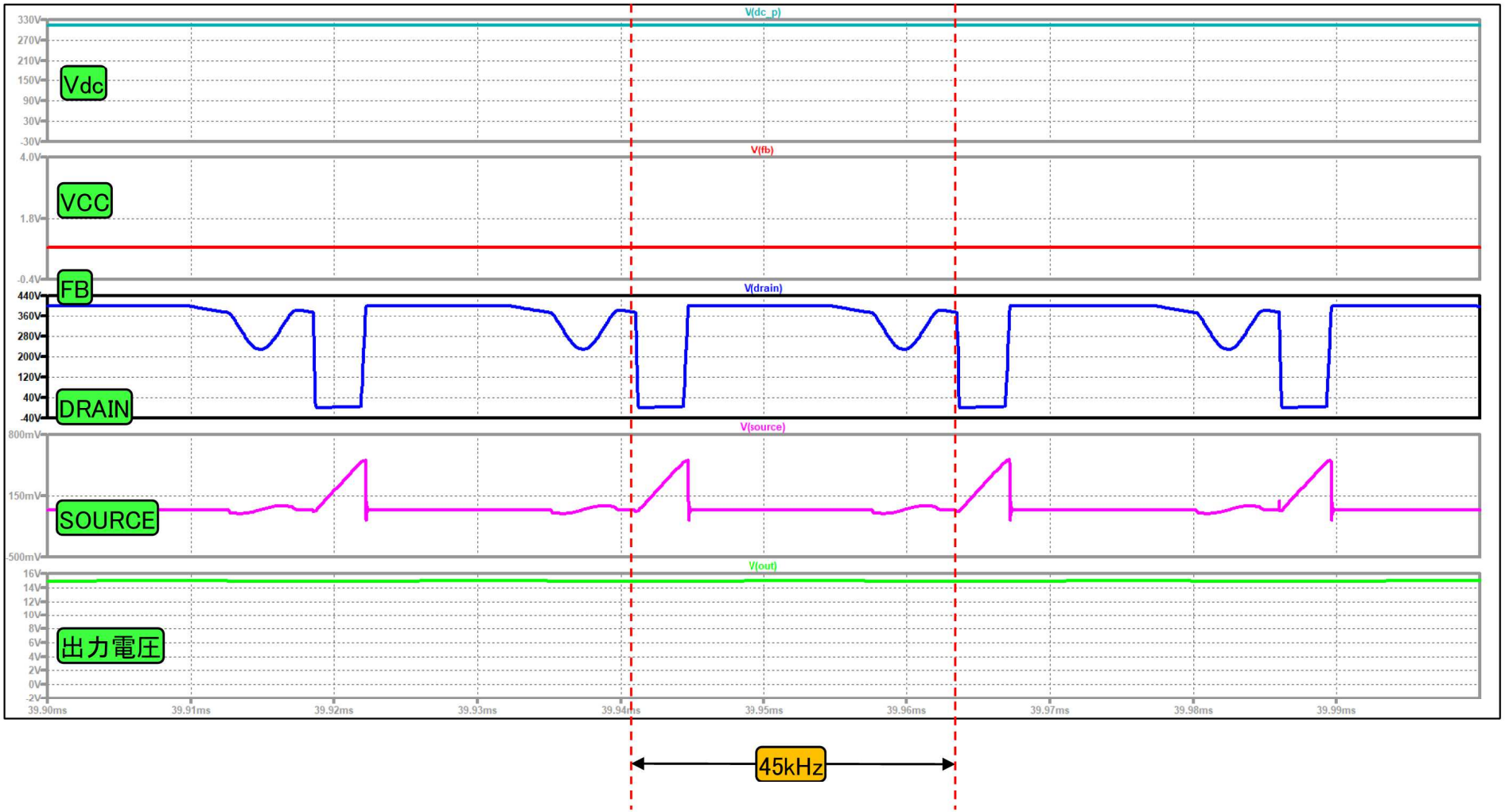
V(dc_p)
Vdc
V(fb)
VCC
FB
V(drain)
DRAIN
V(source)
SOURCE
V(out)
出力電圧
45kHz
39.90ms
39.91ms
39.92ms
39.93ms
39.94ms
39.95ms
39.96ms
39.97ms
39.98ms
39.99ms

2.3.1 Bust Mode

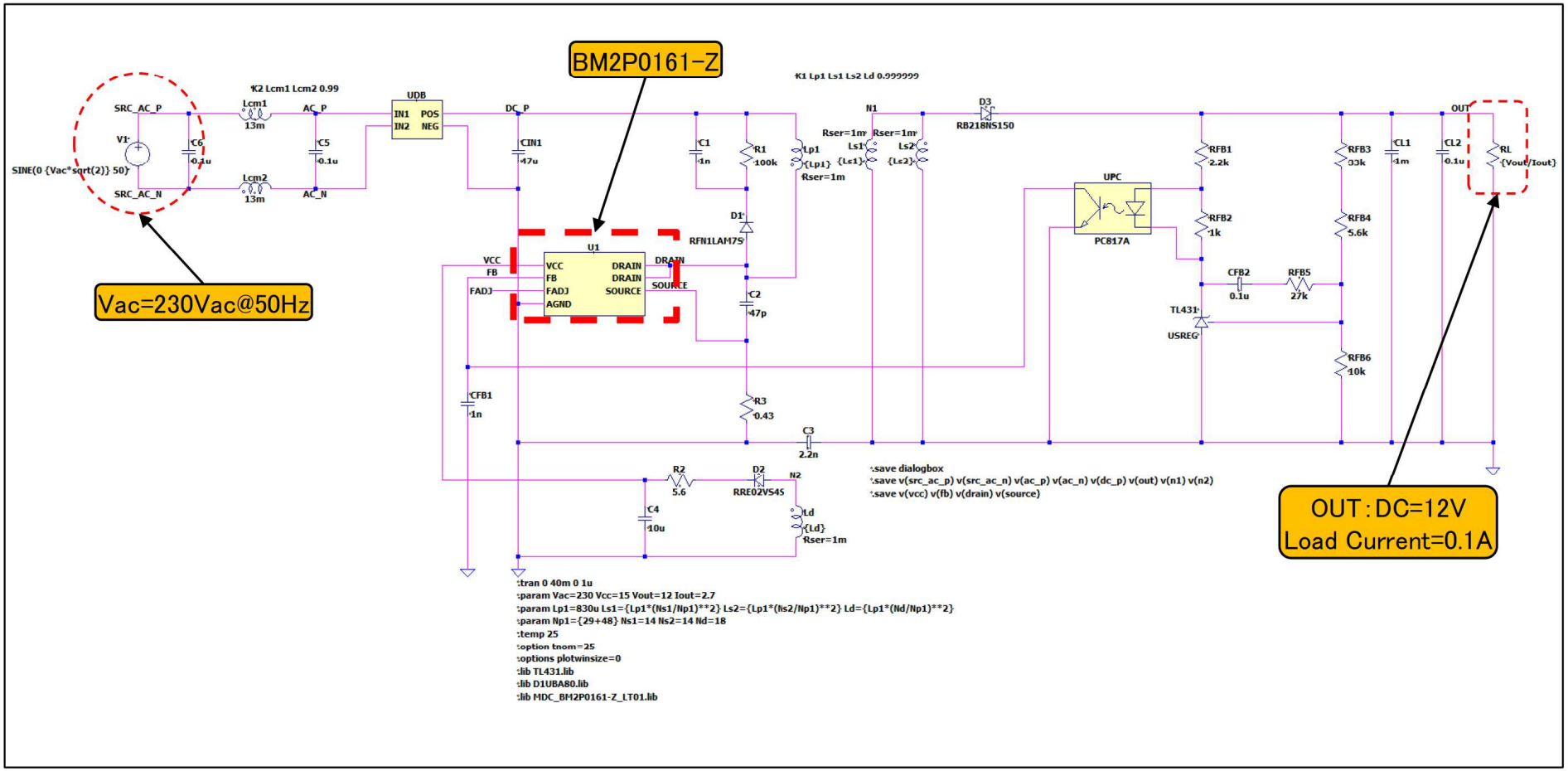

2.3.2 Bust Mode

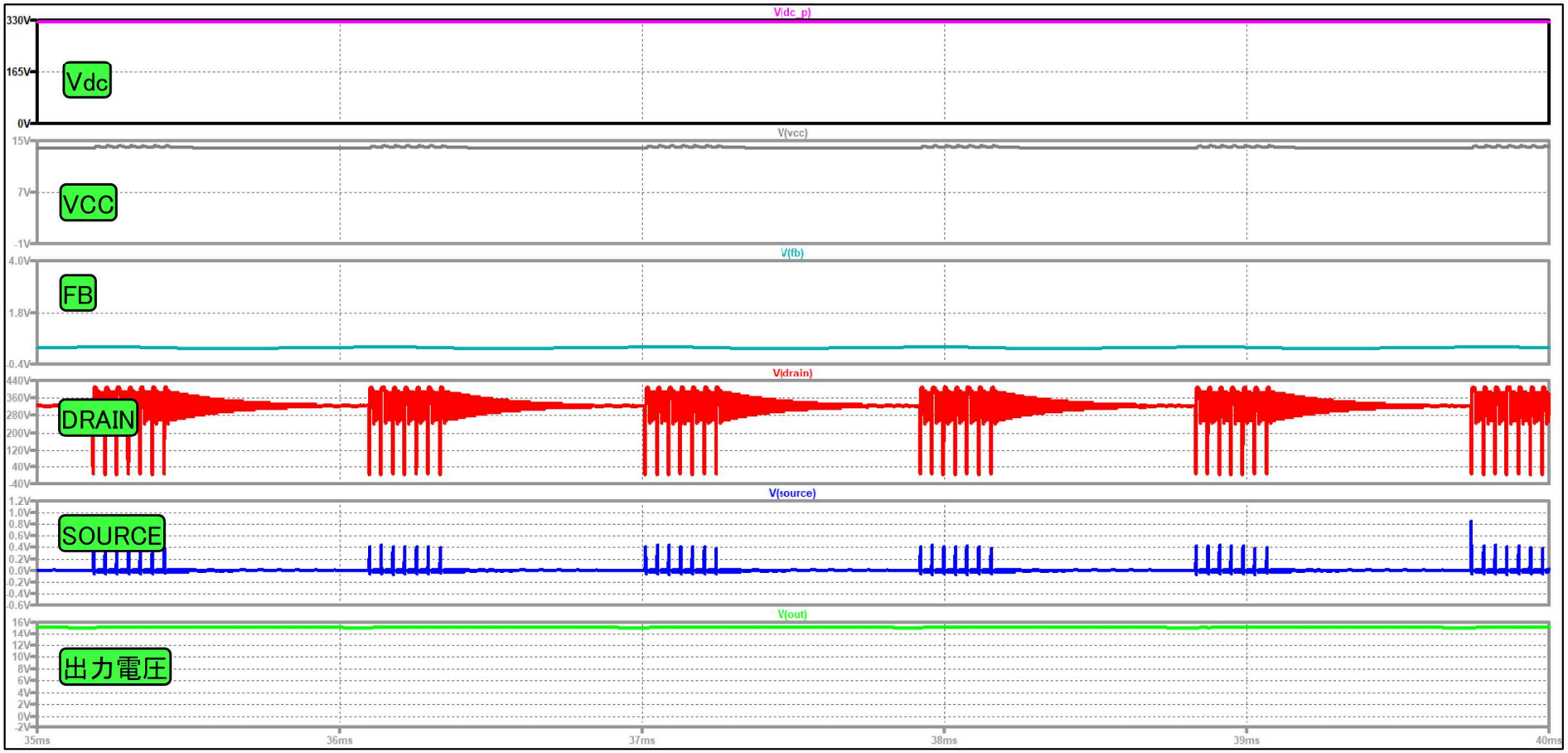

2.4.1 UVLO

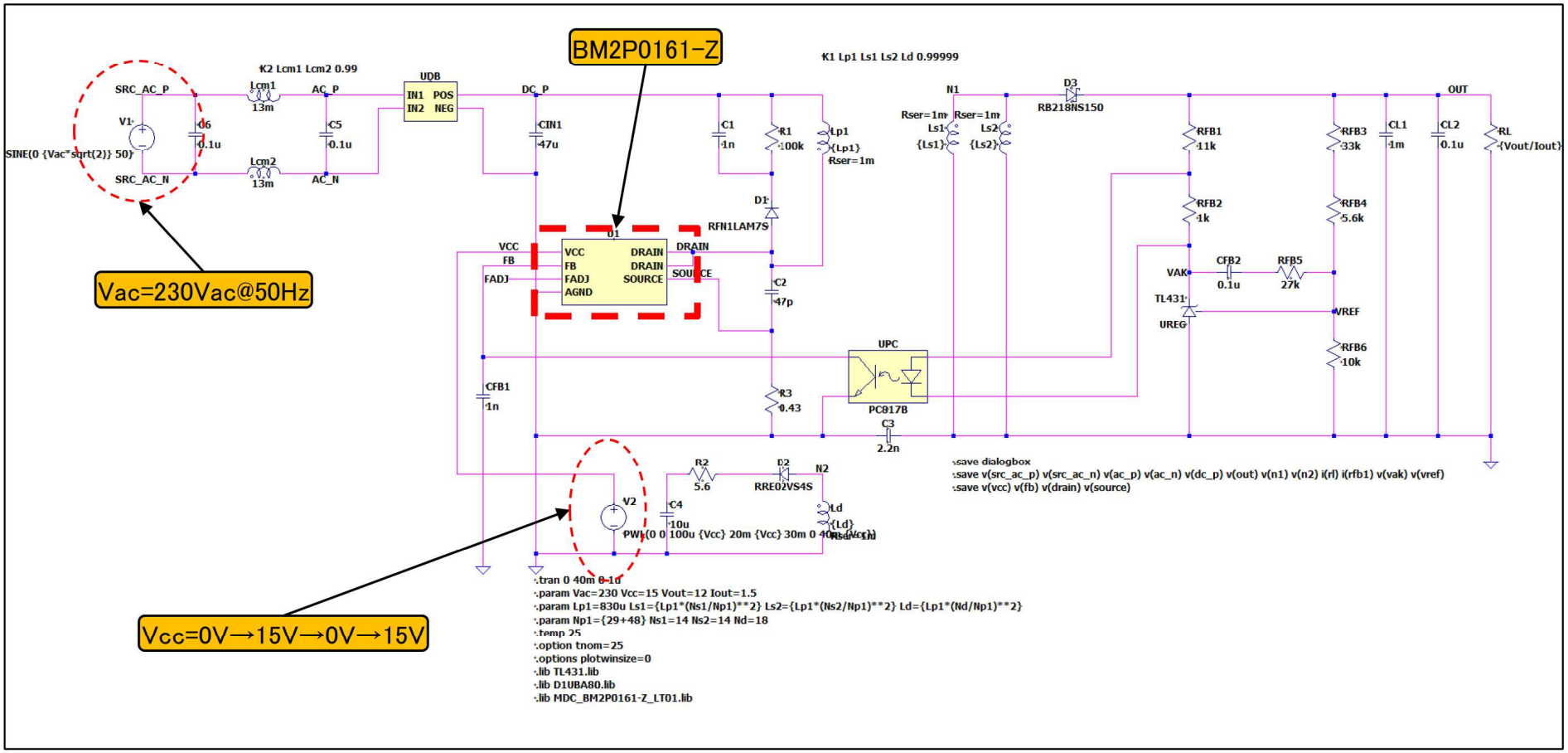
BM2P0161-Z
Vac=230Vac@50Hz
Vcc=0V→15V→0V→15V
K2 Lcm1 Lcm2 0.99
K1 Lp1 Ls1 Ls2 Ld 0.99999
SRC_AC_P
SRC_AC_N
V1
SINE(0 {Vac*sqrt(2)} 50)
C6
0.1u
Lcm1
13m
Lcm2
13m
AC_P
AC_N
C5
0.1u
UDB
IN1 POS
IN2 NEG
DC_P
CIN1
47u
C1
1n
R1
100k
Lp1
{Lp1}
Rser=1m
D1
RFN1LAM7S
U1
VCC
FB
FADJ
AGND
DRAIN
DRAIN
SOURCE
C2
47p
CFB1
1n
R3
0.43
UPC
PC817B
C3
2.2n
N1
Rser=1m
Ls1
{Ls1}
Rser=1m
Ls2
{Ls2}
D3
RB218NS150
RFB1
11k
RFB2
1k
VAK
CFB2
0.1u
RFB5
27k
TL431
UREG
VREF
RFB3
33k
RFB4
5.6k
RFB6
10k
CL1
1m
CL2
0.1u
OUT
RL
{Vout/Iout}
R2
5.6
D2
RRE02VS4S
N2
C4
10u
V2
PWL(0 0 100u {Vcc} 20m {Vcc} 30m 0 40m {Vcc})
Ld
{Ld}
Rser=1m
.save dialogbox
.save v(src_ac_p) v(src_ac_n) v(ac_p) v(ac_n) v(dc_p) v(out) v(n1) v(n2) i(rl) i(rfb1) v(vak) v(vref)
.save v(vcc) v(fb) v(drain) v(source)
.tran 0 40m 0 1u
.param Vac=230 Vcc=15 Vout=12 Iout=1.5
.param Lp1=830u Ls1={Lp1*(Ns1/Np1)**2} Ls2={Lp1*(Ns2/Np1)**2} Ld={Lp1*(Nd/Np1)**2}
.param Np1={29+48} Ns1=14 Ns2=14 Nd=18
.temp 25
.option tnom=25
.options plotwinsize=0
.lib TL431.lib
.lib D1UBA80.lib
.lib MDC_BM2P0161-Z_LT01.lib

2.4.2 UVLO


V(vcc)
VCC
8.2V
13.5V
V(fb)
FB
V(drain)
DRAIN
V(out)
出力電圧
10ms
15ms
20ms
25ms
30ms
35ms
40ms